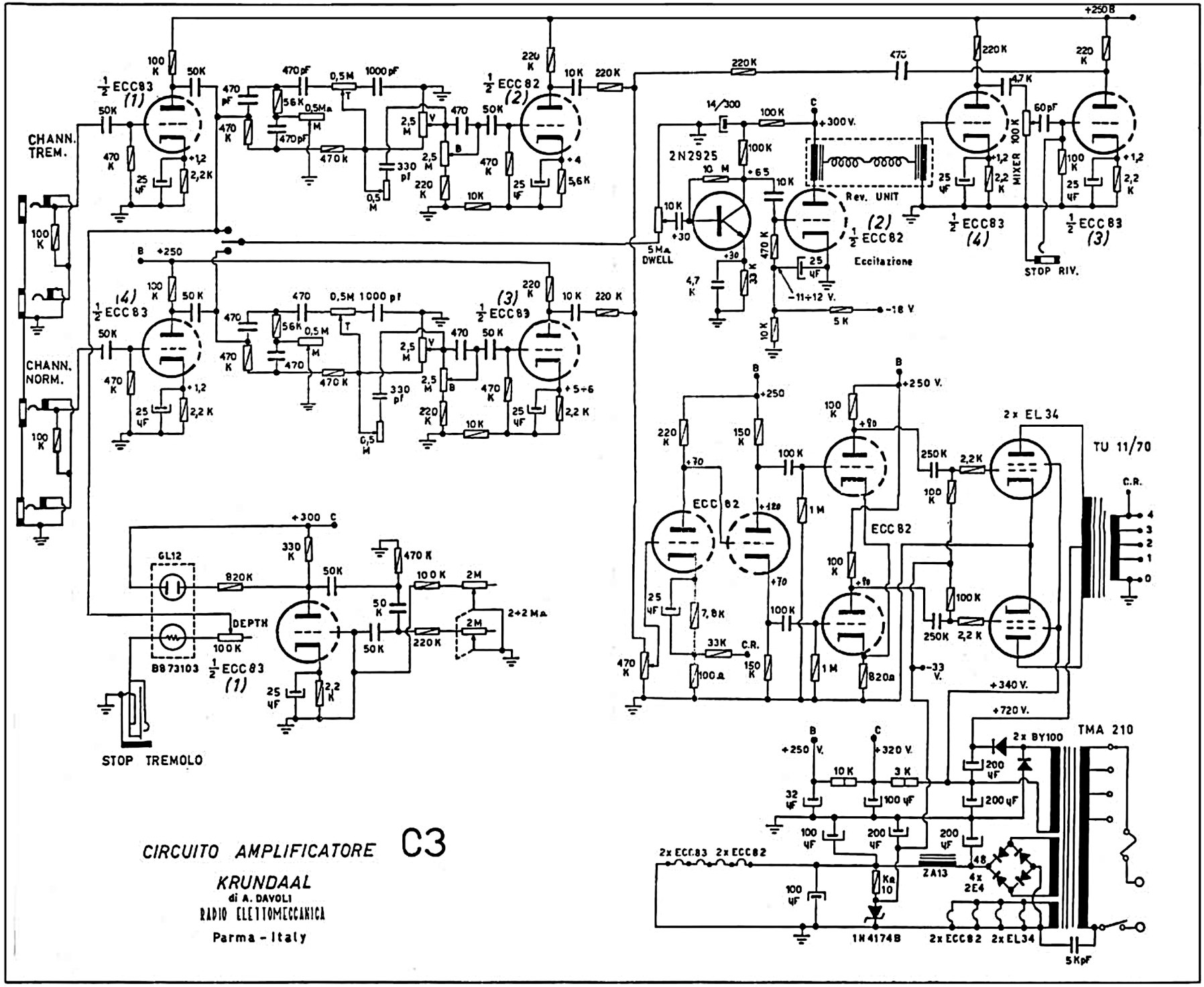
CHANN. TREM.
CHANN. NORM.
½ ECC83 (1)
½ ECC82 (2)
½ ECC83 (3)
½ ECC83 (4)
2N2925
Rev. UNIT
Eccitazione
DWELL
MIXER
STOP RIV.
STOP TREMOLO
GL12
DEPTH
B873103
½ ECC83 (1)
ECC82
ECC82
2 x EL 34
TU 11/70
C.R.
TMA 210
2 x BY100
2x ECC83 2x ECC82
ZA13
4 x 2E4
1N4174B
2x ECC82 2x EL34
5KpF
+250 B
+300 V.
+250 V.
+340 V.
+720 V.
+320 V.
-11÷12 V.
-18 V
-33 V.
CIRCUITO AMPLIFICATORE C3
KRUNDAAL
di A. DAVOLI
RADIO ELETTOMECCANICA
Parma - Italy