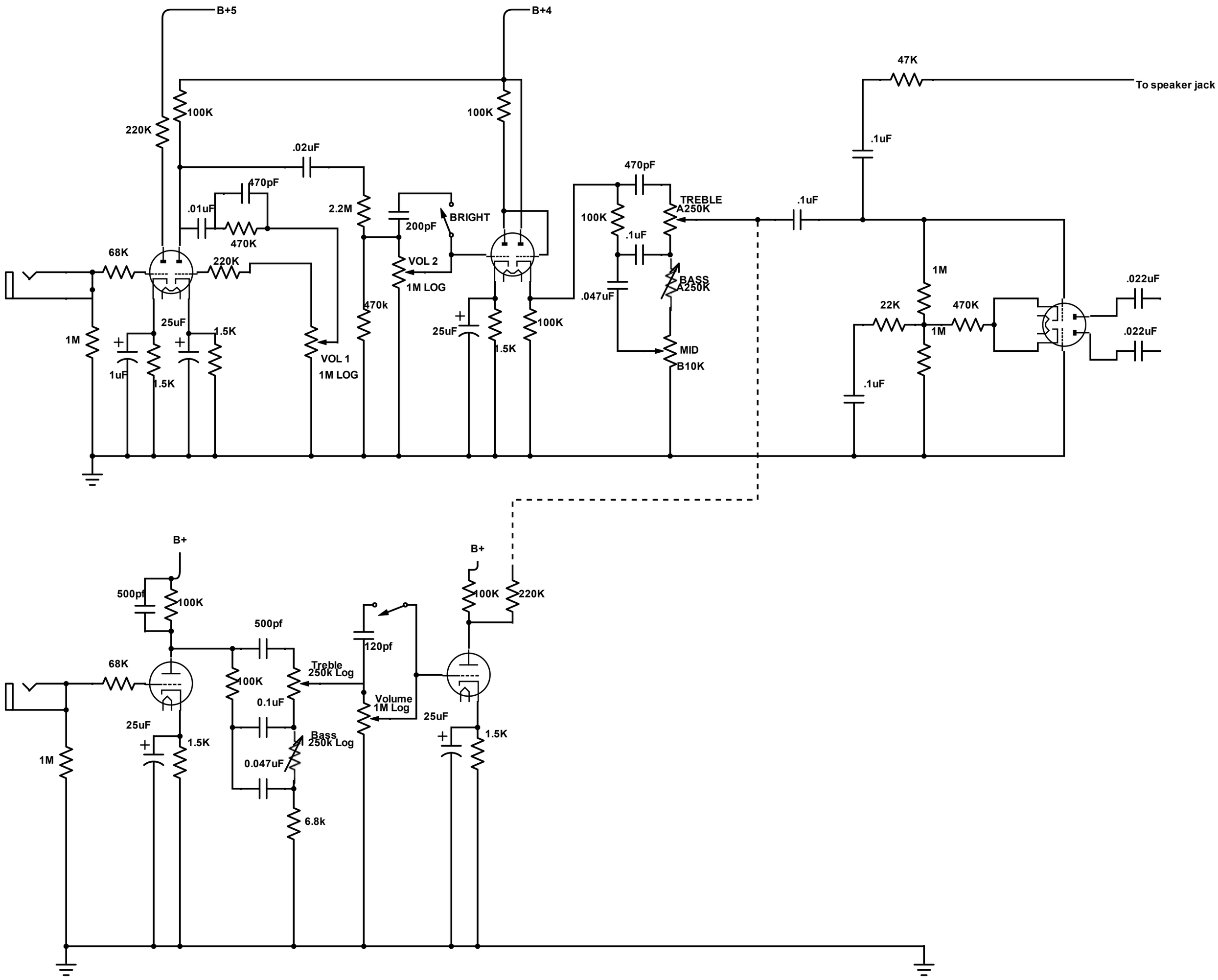
B+5
B+4
47K
To speaker jack
100K
220K
100K
.02uF
.1uF
470pF
470pF
.01uF
2.2M
BRIGHT
TREBLE
A250K
.1uF
100K
200pF
470K
.1uF
68K
220K
VOL 2
1M
BASS
A250K
1M LOG
.022uF
.047uF
470k
22K
470K
25uF
1.5K
100K
25uF
1M
1M
.022uF
1.5K
MID
B10K
VOL 1
1M LOG
1uF
1.5K
.1uF
B+
B+
500pf
100K
100K
220K
500pf
120pf
68K
Treble
250k Log
100K
0.1uF
Volume
1M Log
25uF
25uF
Bass
250k Log
1.5K
1.5K
1M
0.047uF
6.8k