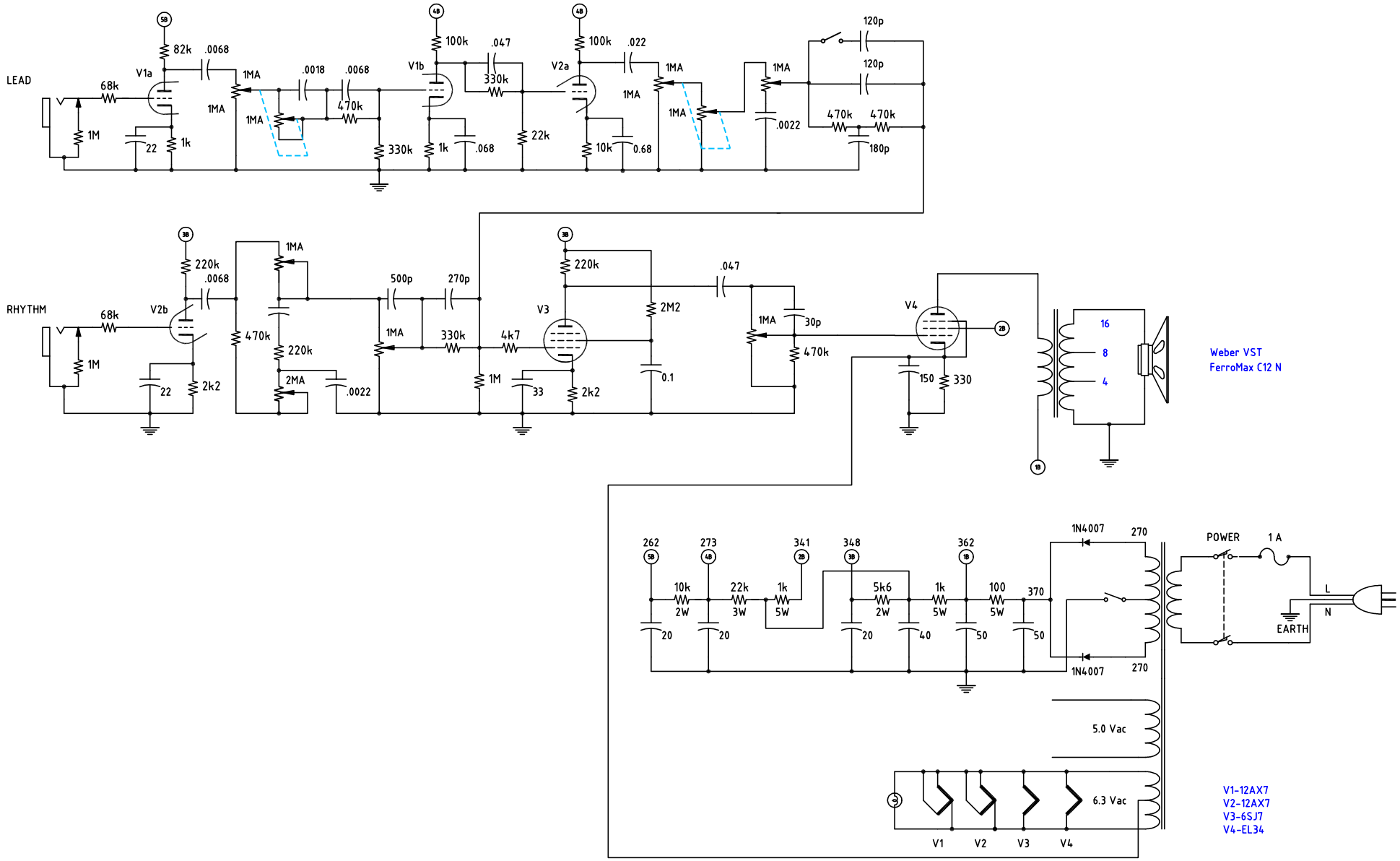

VOLTAGE CHART

	1	2	3	4	5	6	7	8	9
12AX7									
12AX7									
6SJ7									
EL34									

NOTES:
PT IS STANCOR PC-8405
OT IS HEYBOER FROM DOBERMAN
RESISTORS 2W METAL OXIDE UNLESS SPECIFIED
POWER SUPPLY CAPS 500 VOLT
CATHODE CAPS 50 VOLT
CAPACITOR VALUES IN OHMS UNLESS SPECIFIED

Minnesota Amp Builders

SCALE: NONE
DATE: 11/16/04

PRELIMINARY

DRAWN BY: Sean Weatherford

This schematic developed by Carl Berger, Russ Shermer, Ross Sites, John Ward and Mark LeSage
The amplifier was to be raffled off to raise money for charity. Hence the name raffler.

RAFFLER VERSION 1.0

DRAWING NUMBER
MAB-R01