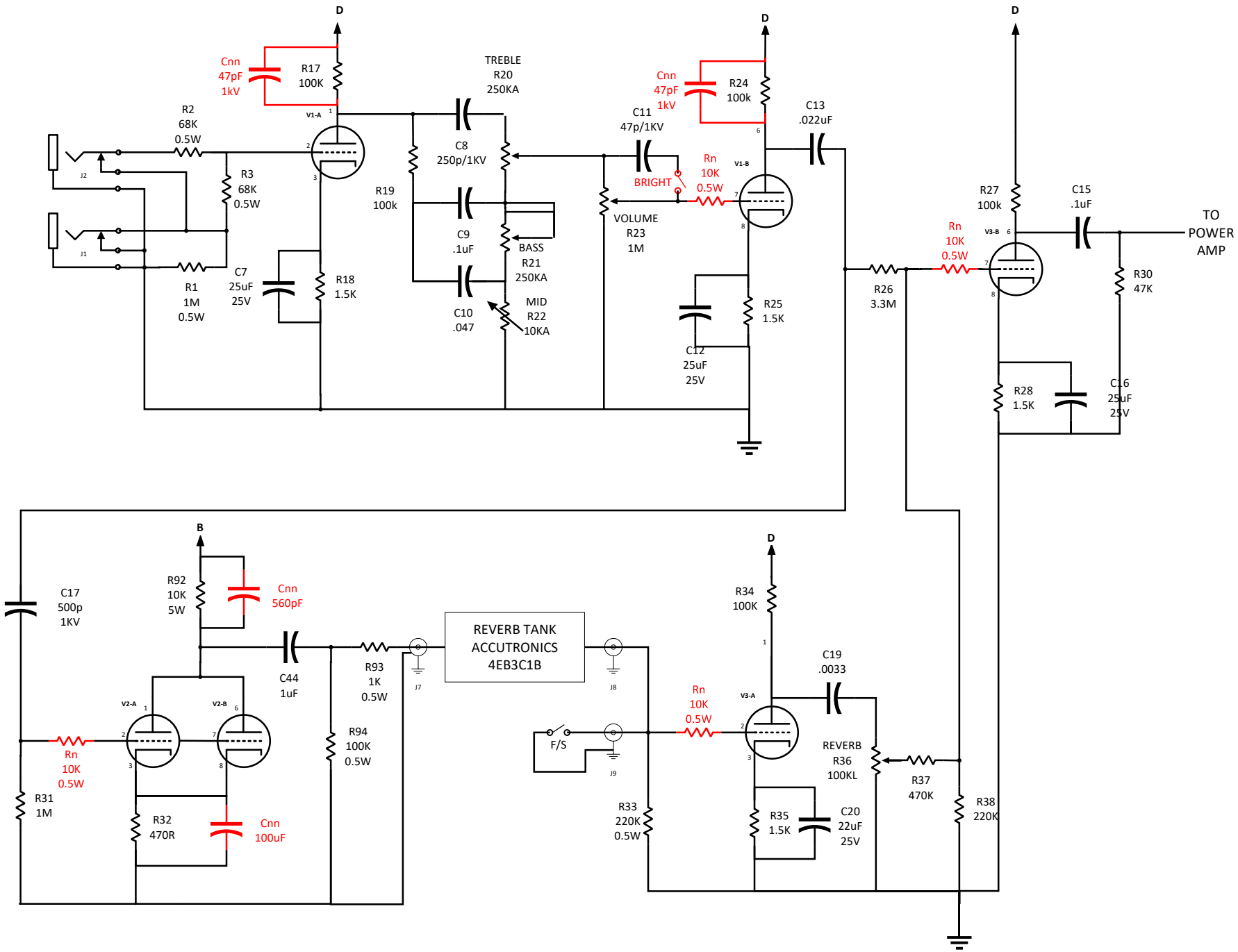
D
Cnn
47pF
1kV
R17
100K
V1-A
R2
68K
0.5W
R3
68K
0.5W
J2
J1
R1
1M
0.5W
C7
25uF
25V
R18
1.5K
R19
100k
TREBLE
R20
250KA
C8
250p/1KV
C9
.1uF
BASS
R21
250KA
C10
.047
MID
R22
10KA
C11
47p/1KV
BRIGHT
VOLUME
R23
1M
Cnn
47pF
1kV
R24
100k
Rn
10K
0.5W
V1-B
C13
.022uF
C12
25uF
25V
R25
1.5K
R26
3.3M
R27
100k
Rn
10K
0.5W
V3-B
C15
.1uF
TO
POWER
AMP
R30
47K
R28
1.5K
C16
25uF
25V
B
C17
500p
1KV
R92
10K
5W
Cnn
560pF
C44
1uF
R93
1K
0.5W
J7
REVERB TANK
ACCUTRONICS
4EB3C1B
J8
V2-A
V2-B
Rn
10K
0.5W
R31
1M
R32
470R
Cnn
100uF
R94
100K
0.5W
F/S
J9
R34
100K
C19
.0033
V3-A
Rn
10K
0.5W
REVERB
R36
100KL
R37
470K
R38
220K
R33
220K
0.5W
R35
1.5K
C20
22uF
25V

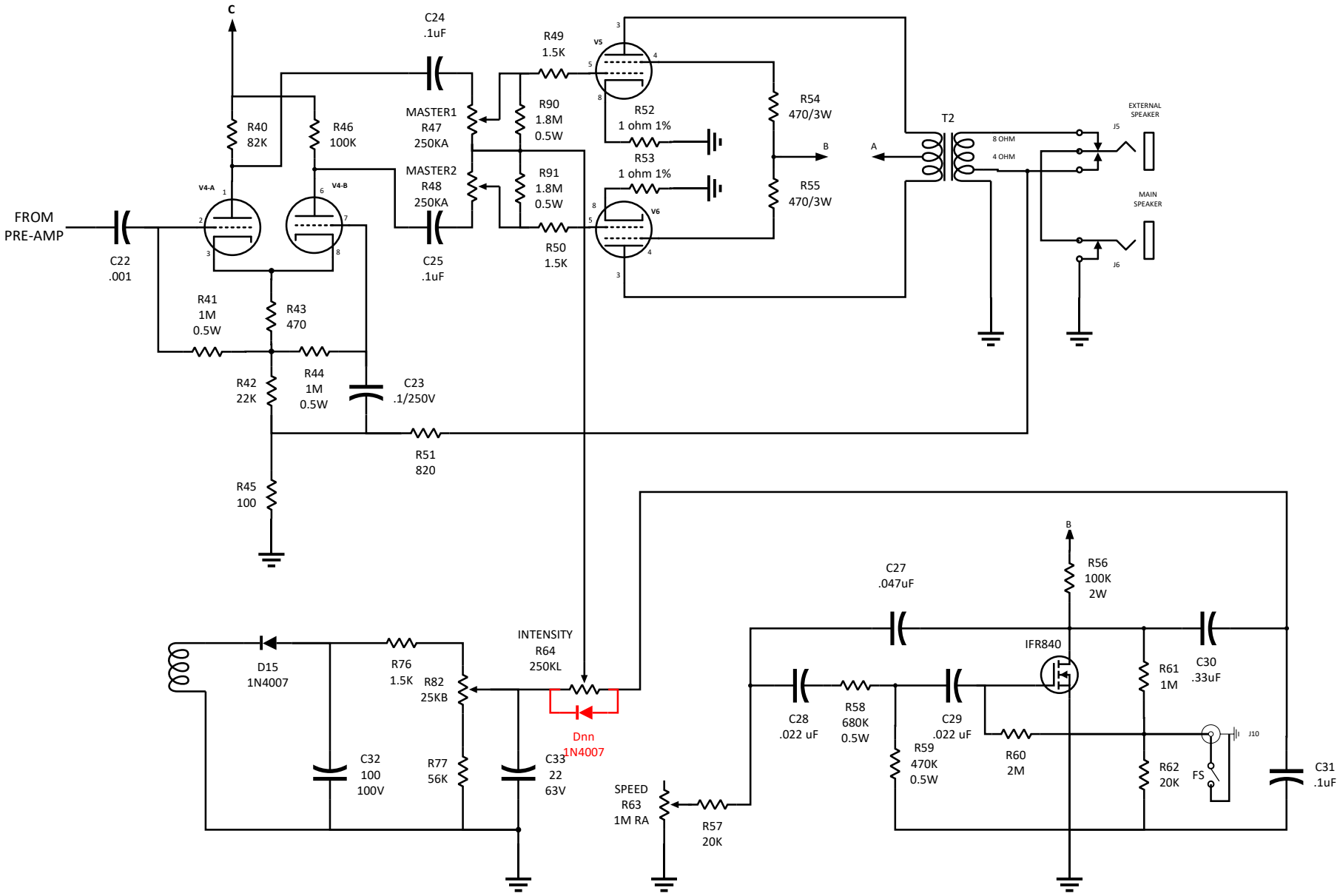
C
C24
.1uF
R49
1.5K
V5
R40
82K
R46
100K
MASTER1
R47
250KA
R90
1.8M
0.5W
R52
1 ohm 1%
R54
470/3W
T2
EXTERNAL
SPEAKER
J5
8 OHM
4 OHM
A
B
R53
1 ohm 1%
MASTER2
R48
250KA
R91
1.8M
0.5W
R55
470/3W
V4-A
V4-B
V6
MAIN
SPEAKER
FROM
PRE-AMP
C22
.001
C25
.1uF
R50
1.5K
J6
R41
1M
0.5W
R43
470
R42
22K
R44
1M
0.5W
C23
.1/250V
R51
820
R45
100
B
C27
.047uF
R56
100K
2W
INTENSITY
R64
250KL
IFR840
D15
1N4007
R76
1.5K
R82
25KB
R61
1M
C30
.33uF
C28
.022 uF
R58
680K
0.5W
C29
.022 uF
Dnn
1N4007
R59
470K
0.5W
R60
2M
J10
C32
100
100V
R77
56K
C33
22
63V
R62
20K
FS
C31
.1uF
SPEED
R63
1M RA
R57
20K

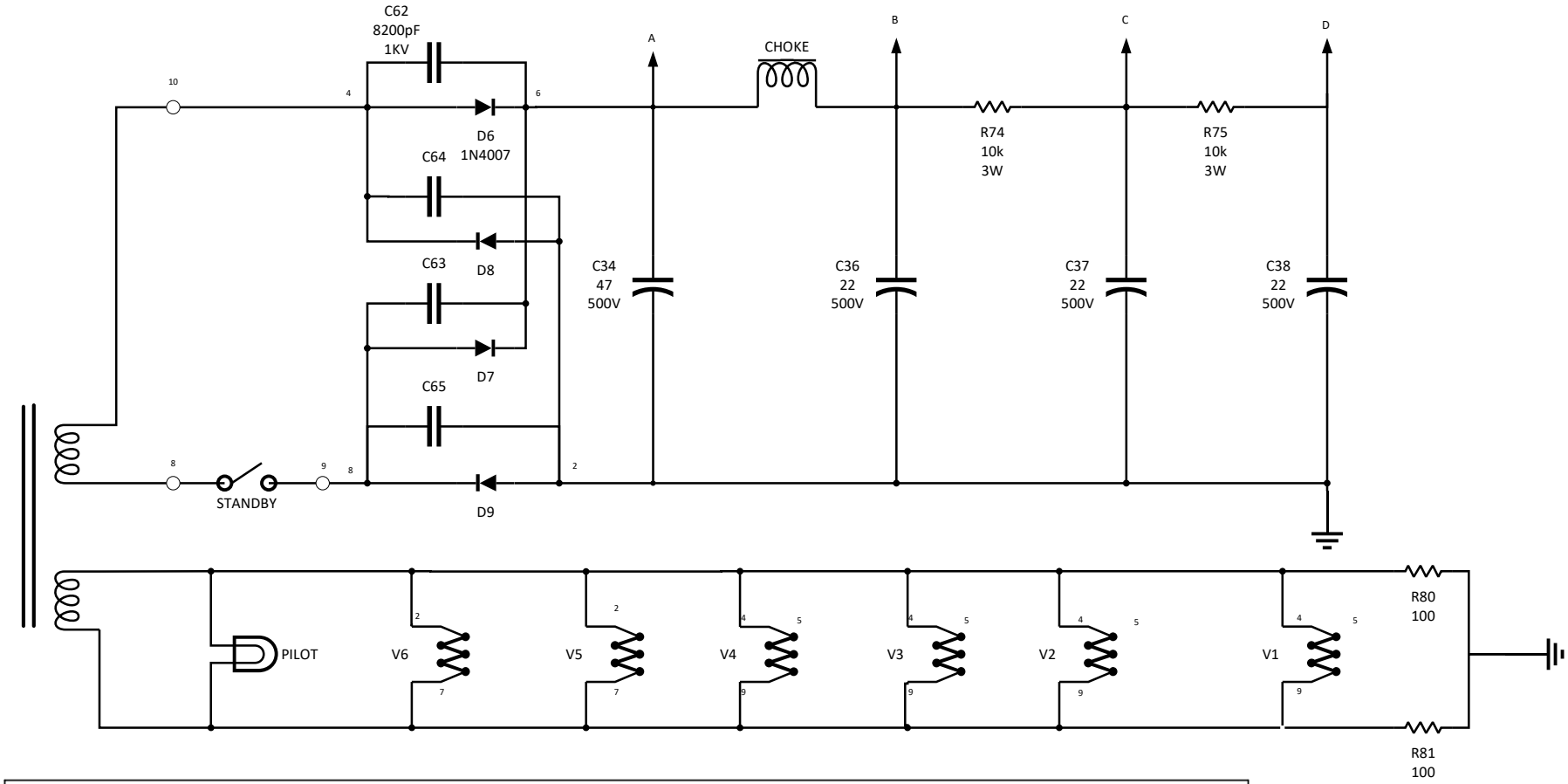
C62
8200pF
1KV
D6
1N4007
C64
D8
C63
D7
C65
D9
STANDBY
CHOKE
A
B
C
D
R74
10k
3W
R75
10k
3W
C34
47
500V
C36
22
500V
C37
22
500V
C38
22
500V
PILOT
V6
V5
V4
V3
V2
V1
R80
100
R81
100

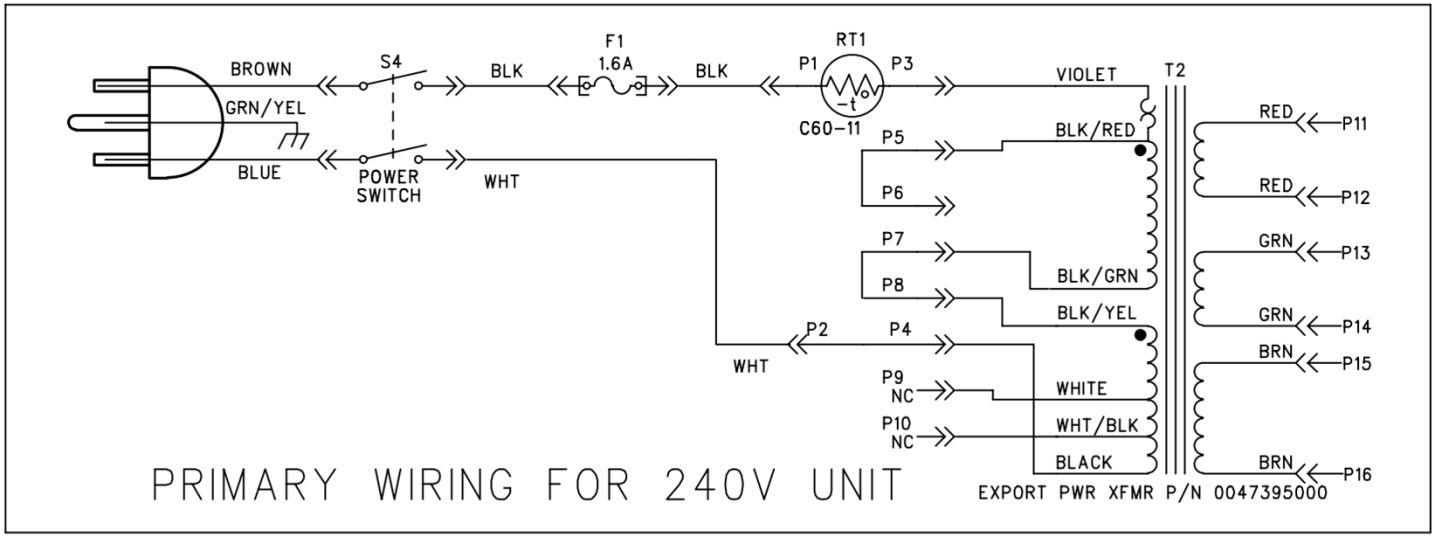
BROWN
GRN/YEL
BLUE
S4
POWER
SWITCH
BLK
F1
1.6A
BLK
RT1
P1
P3
C60-11
WHT
VIOLET
T2
P5
BLK/RED
P6
P7
P8
BLK/GRN
BLK/YEL
P2
P4
WHT
P9
NC
P10
NC
WHITE
WHT/BLK
BLACK
RED
P11
RED
P12
GRN
P13
GRN
P14
BRN
P15
BRN
P16
PRIMARY WIRING FOR 240V UNIT
EXPORT PWR XFMR P/N 0047395000