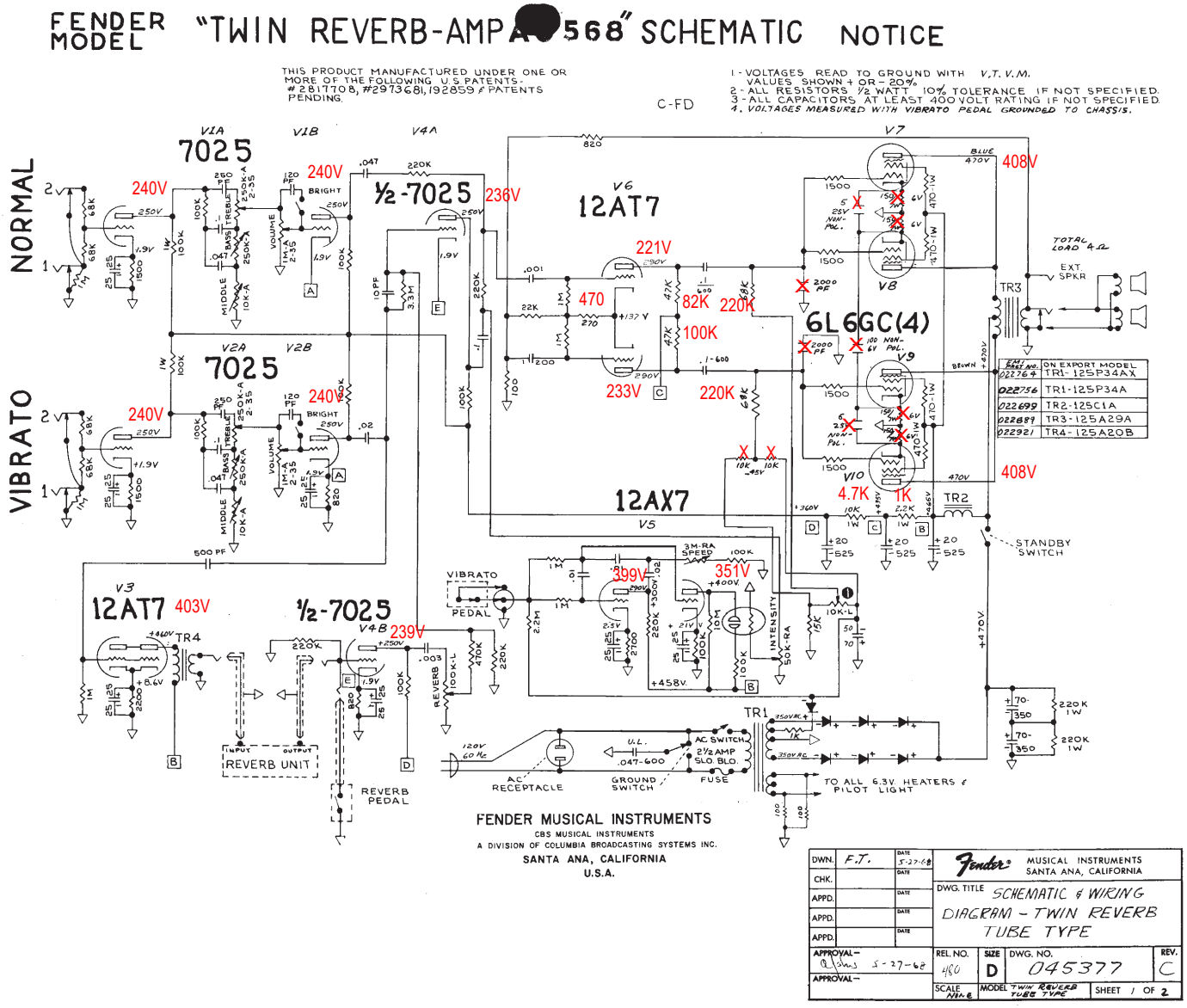

TRANSFORMER 022756

SECONDARY:
RED 1: 300AC
RED 2: 300AC
BLUE: 50AC
GREEN 6.3AC