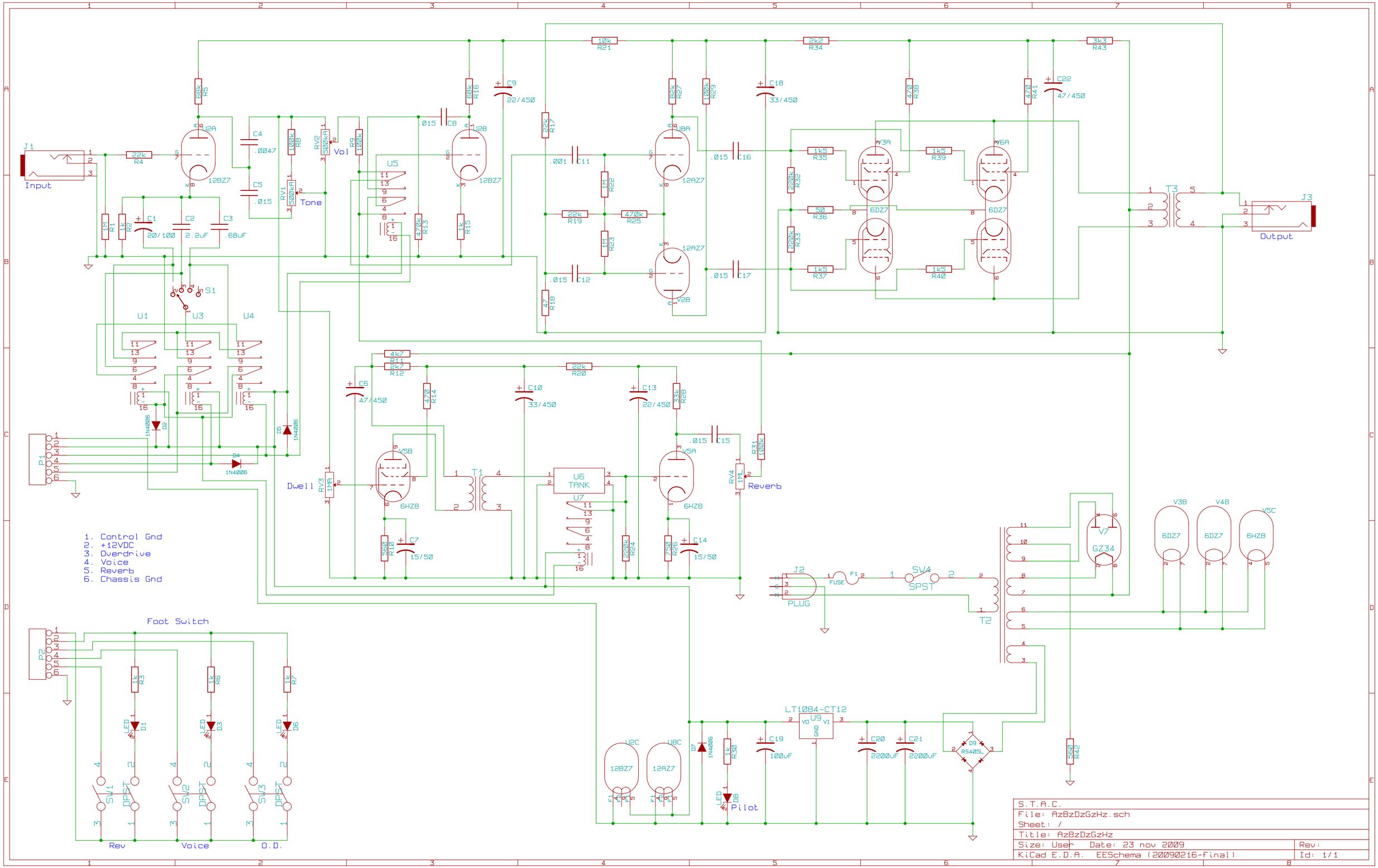

S.T.A.C.	
File: AzBzDzGzHz.sch	
Sheet: /	
Title: AzBzDzGzHz	
Size: User Date: 23 nov 2009	Rev:
KiCad E.D.A. EESchema (20090216-final)	Id: 1/1