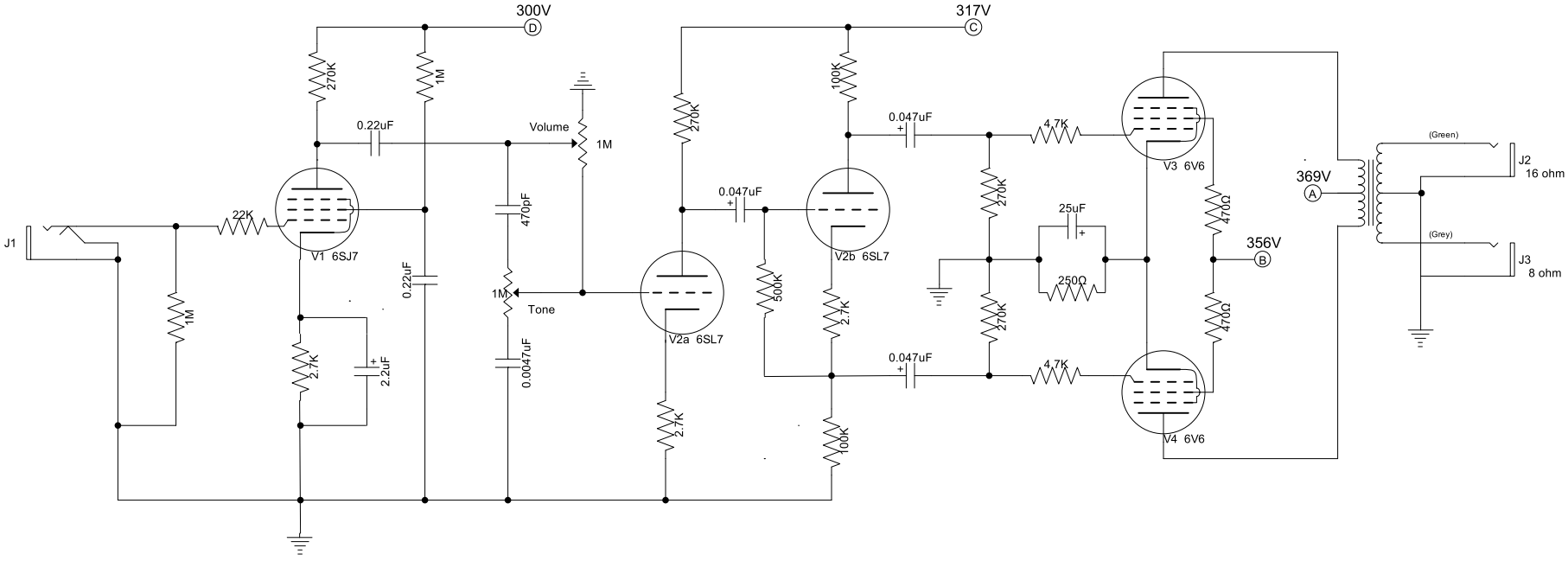
300V
D
317V
C
270K
1M
0.22uF
Volume
1M
100K
0.047uF
4.7K
V3 6V6
(Green)
J2
16 ohm
369V
A
J1
22K
V1 6SJ7
470pF
270K
0.047uF
V2b 6SL7
25uF
470Ω
356V
B
(Grey)
J3
8 ohm
1M
0.22uF
1M
Tone
500K
250Ω
1M
2.7K
2.2uF
0.0047uF
V2a 6SL7
2.7K
270K
470Ω
0.047uF
4.7K
V4 6V6
2.7K
100K

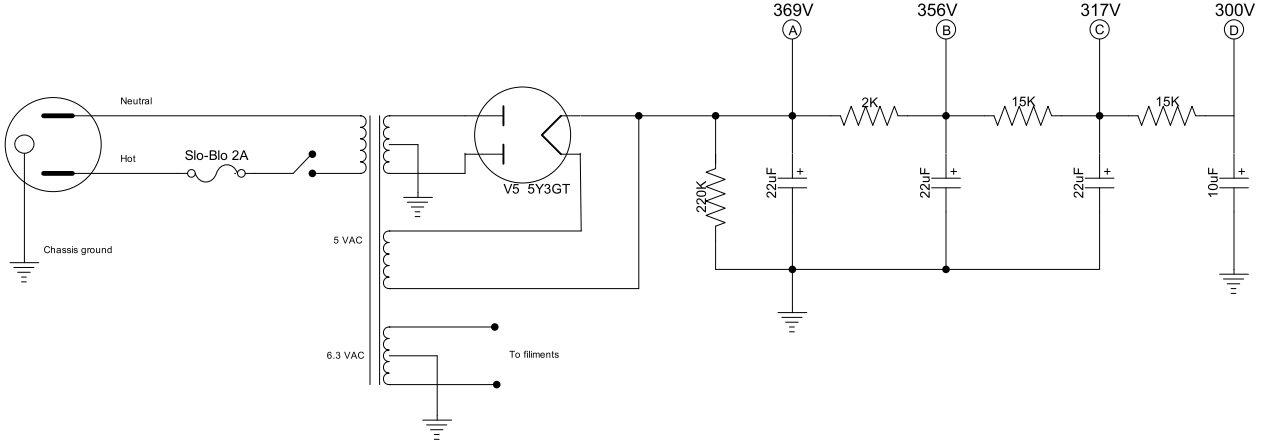
369V
A
356V
B
317V
C
300V
D
Neutral
Hot
Slo-Blo 2A
V5 5Y3GT
2K
15K
15K
220K
22uF
22uF
22uF
10uF
Chassis ground
5 VAC
6.3 VAC
To filiments