Voltage at the Plates:
#124: 200VDC
BluezMeister: 215VDC
Tubes: 12AX7 (both circuits)

Dumble #124 Overdrive Section

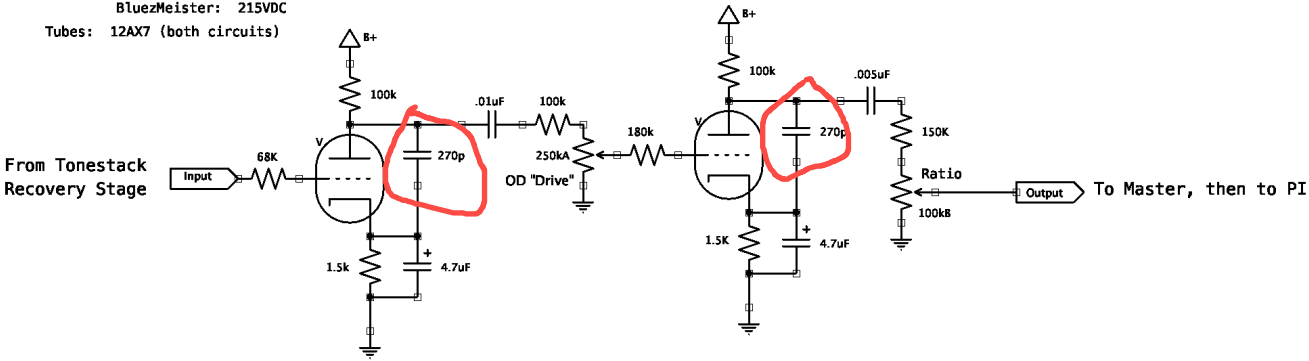
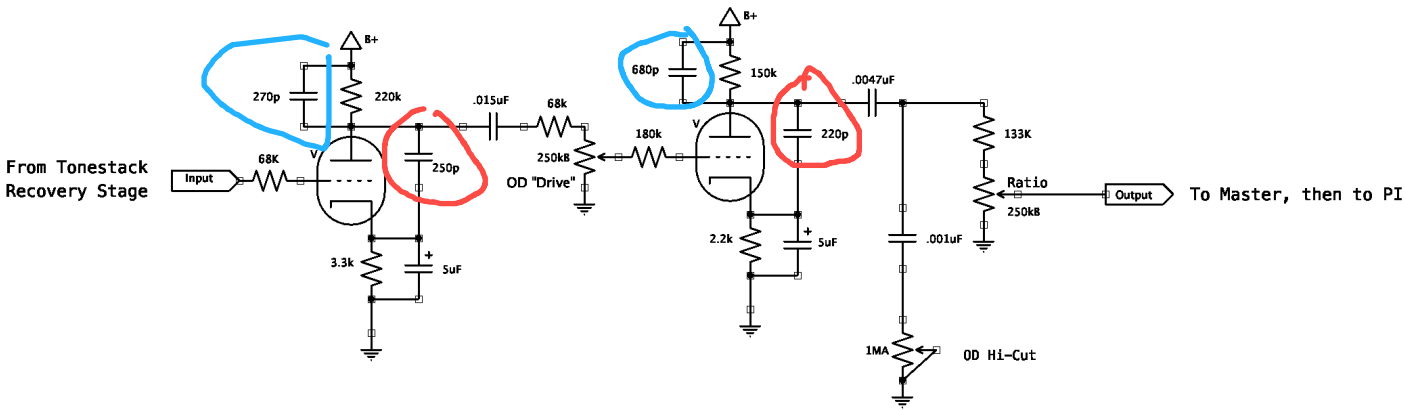
Geezer BluezMeister Overdrive Section v4.1