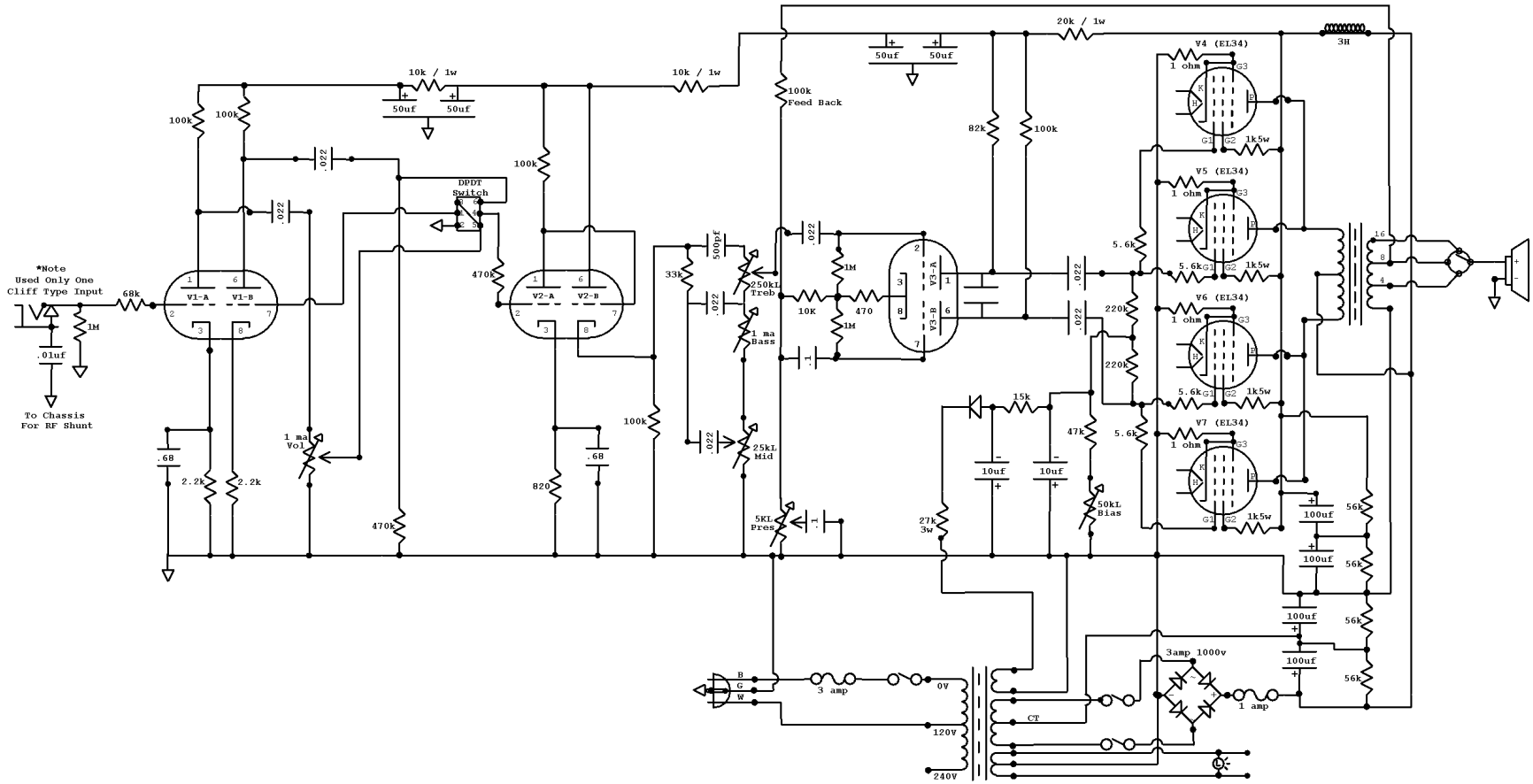

Hoffman 100 Watt Plexi		
with Hotswitch		
David Powell	Rev 1.0 11/27/09	Page #1 of 1