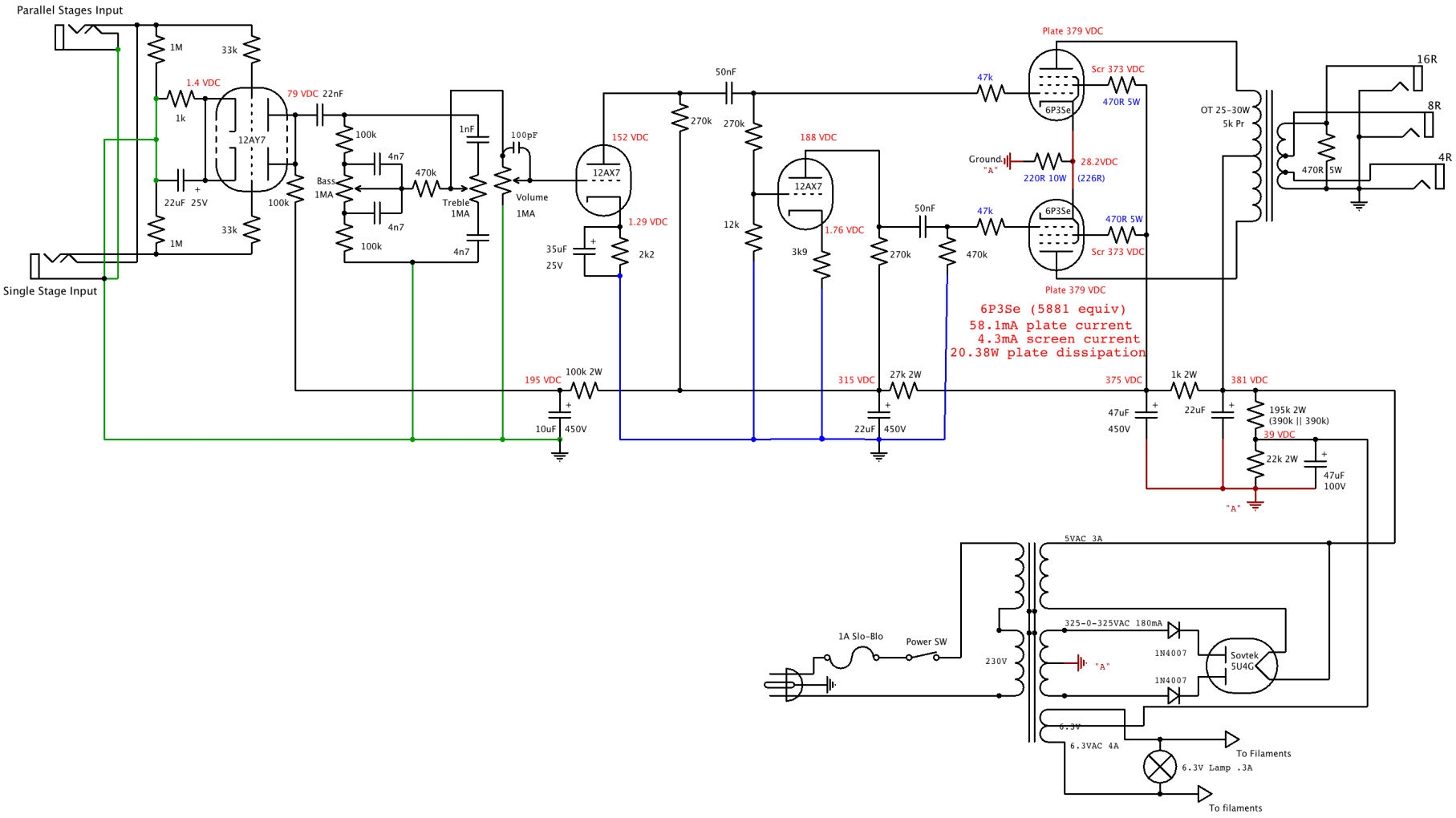

T-Bolt +		
Switchable single/parallel V1		
tubeswell	Rev 1.0 2013-01-14	Page #