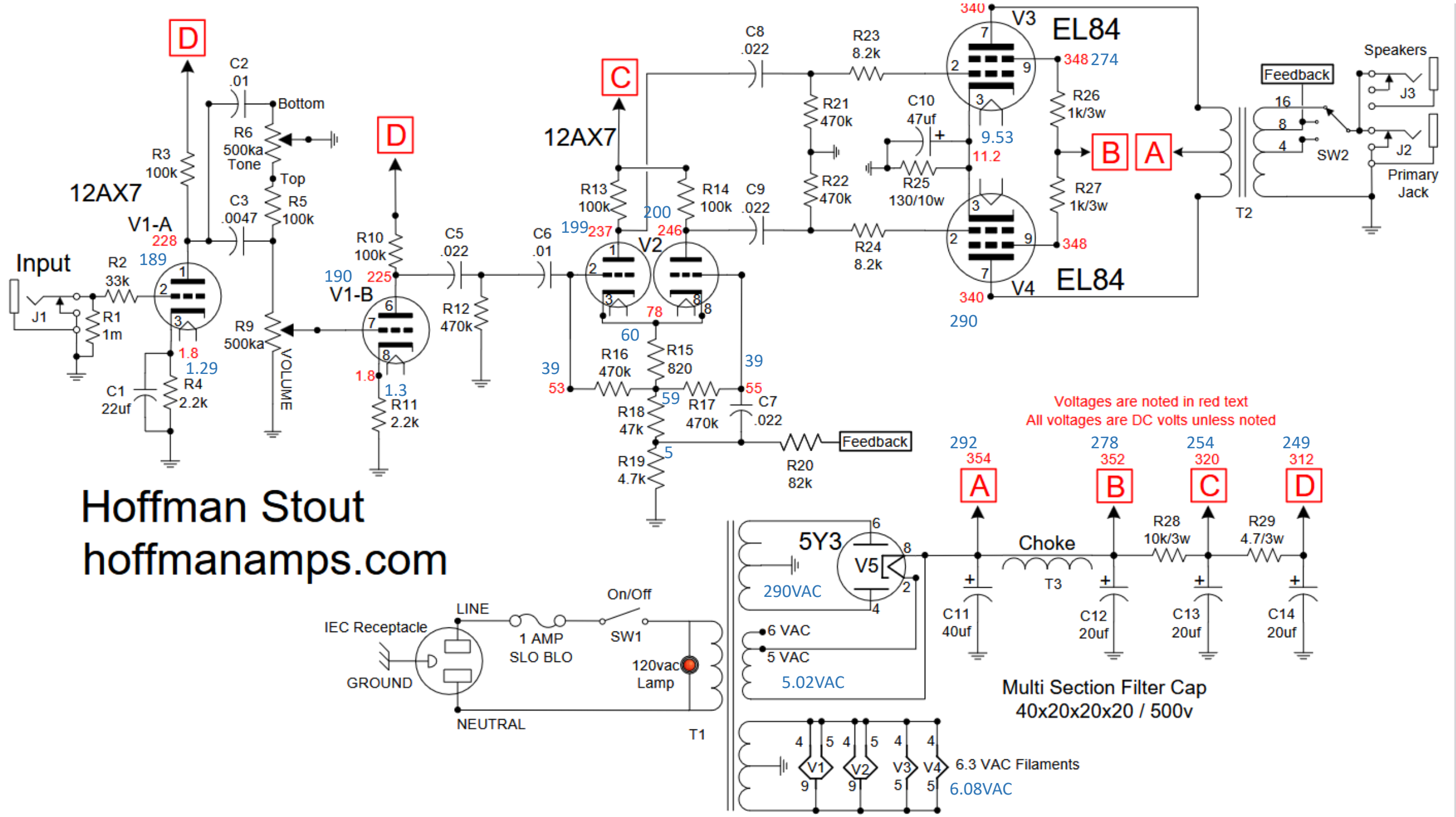
Hoffman Stout
hoffmanamps.com
Voltages are noted in red text
All voltages are DC volts unless noted
12AX7
V1-A
Input
J1
R1
1m
R2
33k
189
228
1.8
1.29
C1
22uf
R4
2.2k
R3
100k
C2
.01
Bottom
R6
500ka
Tone
Top
R5
100k
C3
.0047
R9
500ka
VOLUME
D
R10
100k
190
225
V1-B
1.8
1.3
R11
2.2k
C5
.022
R12
470k
C6
.01
C
12AX7
R13
100k
R14
100k
199
237
200
246
V2
78
60
R15
820
R16
470k
39
53
R17
470k
59
R18
47k
5
R19
4.7k
39
55
C7
.022
R20
82k
Feedback
C8
.022
C9
.022
R21
470k
R22
470k
R23
8.2k
R24
8.2k
C10
47uf
R25
130/10w
9.53
11.2
340
V3
EL84
348
274
R26
1k/3w
R27
1k/3w
348
340
V4
EL84
290
B
A
T2
Feedback
16
8
4
SW2
Speakers
J3
J2
Primary
Jack
292
354
278
352
254
320
249
312
A
B
C
D
Choke
T3
R28
10k/3w
R29
4.7/3w
C11
40uf
C12
20uf
C13
20uf
C14
20uf
Multi Section Filter Cap
40x20x20x20 / 500v
5Y3
V5
290VAC
6 VAC
5 VAC
5.02VAC
IEC Receptacle
GROUND
LINE
NEUTRAL
1 AMP
SLO BLO
On/Off
SW1
120vac
Lamp
T1
V1
V2
V3
V4
6.3 VAC Filaments
6.08VAC