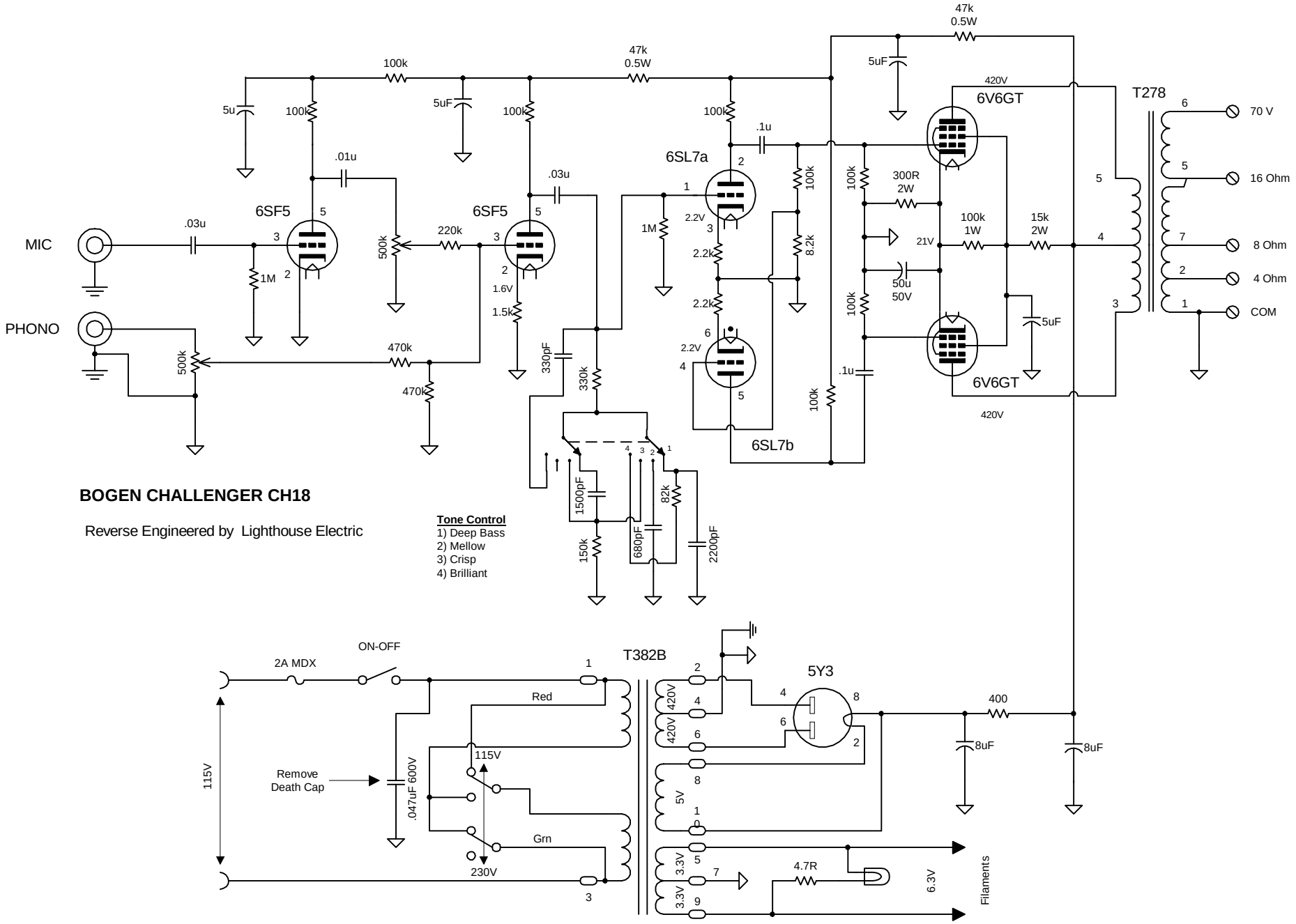

BOGEN CHALLENGER CH18

Reverse Engineered by Lighthouse Electric