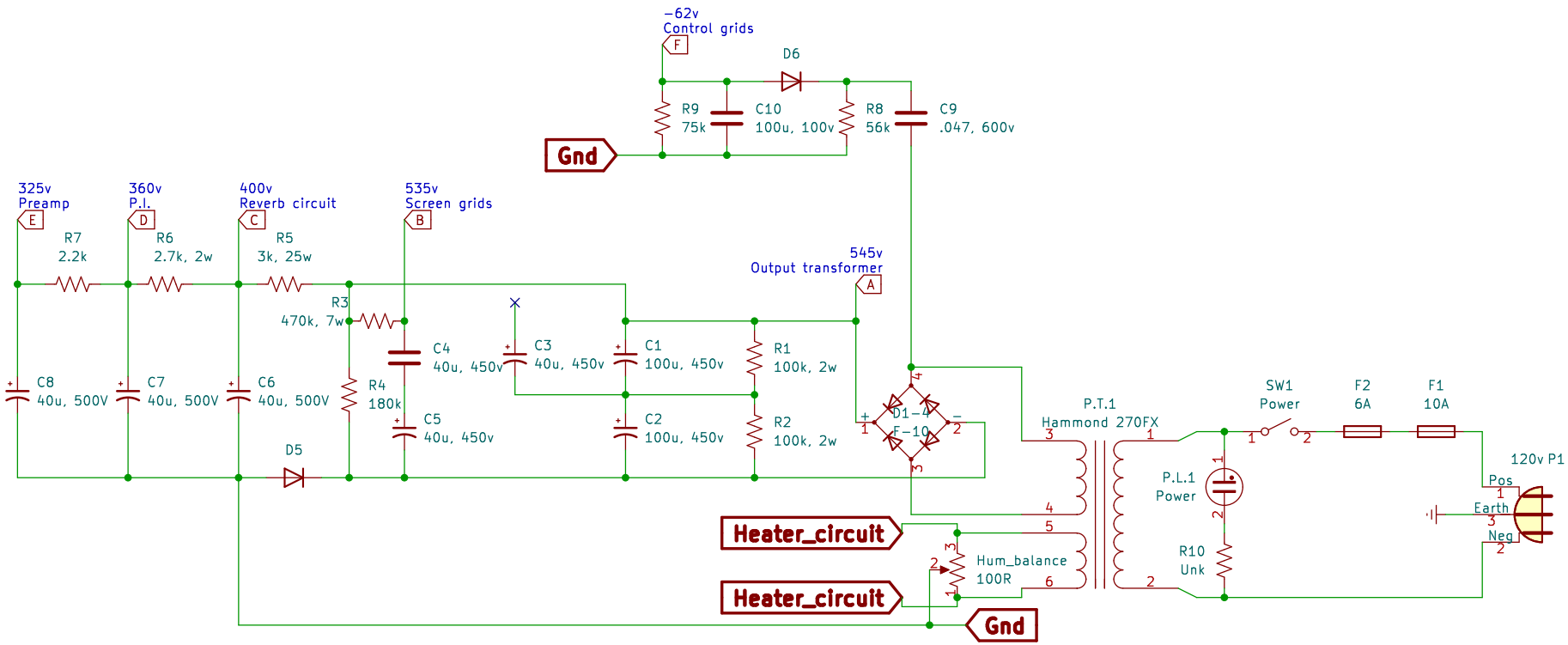

Power supply