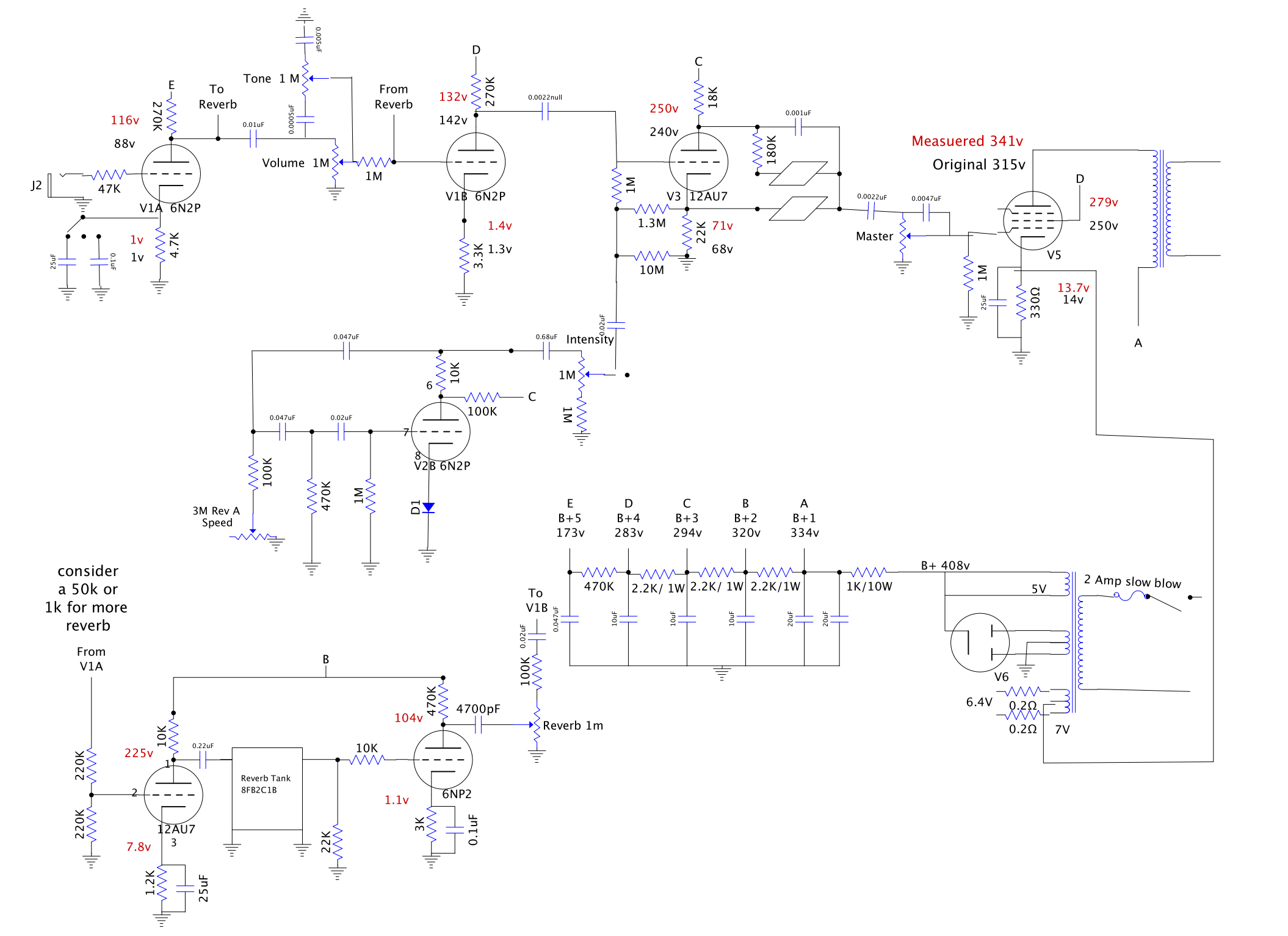
Tone 1 M
0.0005uF
0.0005uF
E
270K
116v
88v
To Reverb
0.01uF
Volume 1M
From Reverb
1M
J2
47K
V1A 6N2P
1v
1v
4.7K
25uF
0.1uF
D
132v
270K
142v
0.0022null
V1B 6N2P
1.4v
1.3v
3.3K
C
18K
250v
240v
0.001uF
180K
1M
V3 12AU7
1.3M
22K
71v
68v
10M
Measuered 341v
Original 315v
D
279v
250v
V5
0.0022uF
0.0047uF
Master
1M
25uF
330Ω
13.7v
14v
A
0.02uF
Intensity
1M
1M
0.047uF
0.68uF
6
10K
C
100K
0.047uF
0.02uF
7
8
V2B 6N2P
100K
470K
1M
D1
3M Rev A Speed
E
B+5
173v
D
B+4
283v
C
B+3
294v
B
B+2
320v
A
B+1
334v
470K
2.2K/ 1W
2.2K/ 1W
2.2K/1W
1K/10W
B+ 408v
5V
2 Amp slow blow
V6
6.4V
0.2Ω
0.2Ω
7V
0.047uF
10uF
10uF
10uF
20uF
20uF
To V1B
0.02uF
100K
Reverb 1m
consider a 50k or 1k for more reverb
From V1A
B
470K
4700pF
104v
10K
225v
0.22uF
Reverb Tank 8FB2C1B
10K
6NP2
1.1v
220K
220K
12AU7
7.8v
3
22K
3K
0.1uF
1.2K
25uF