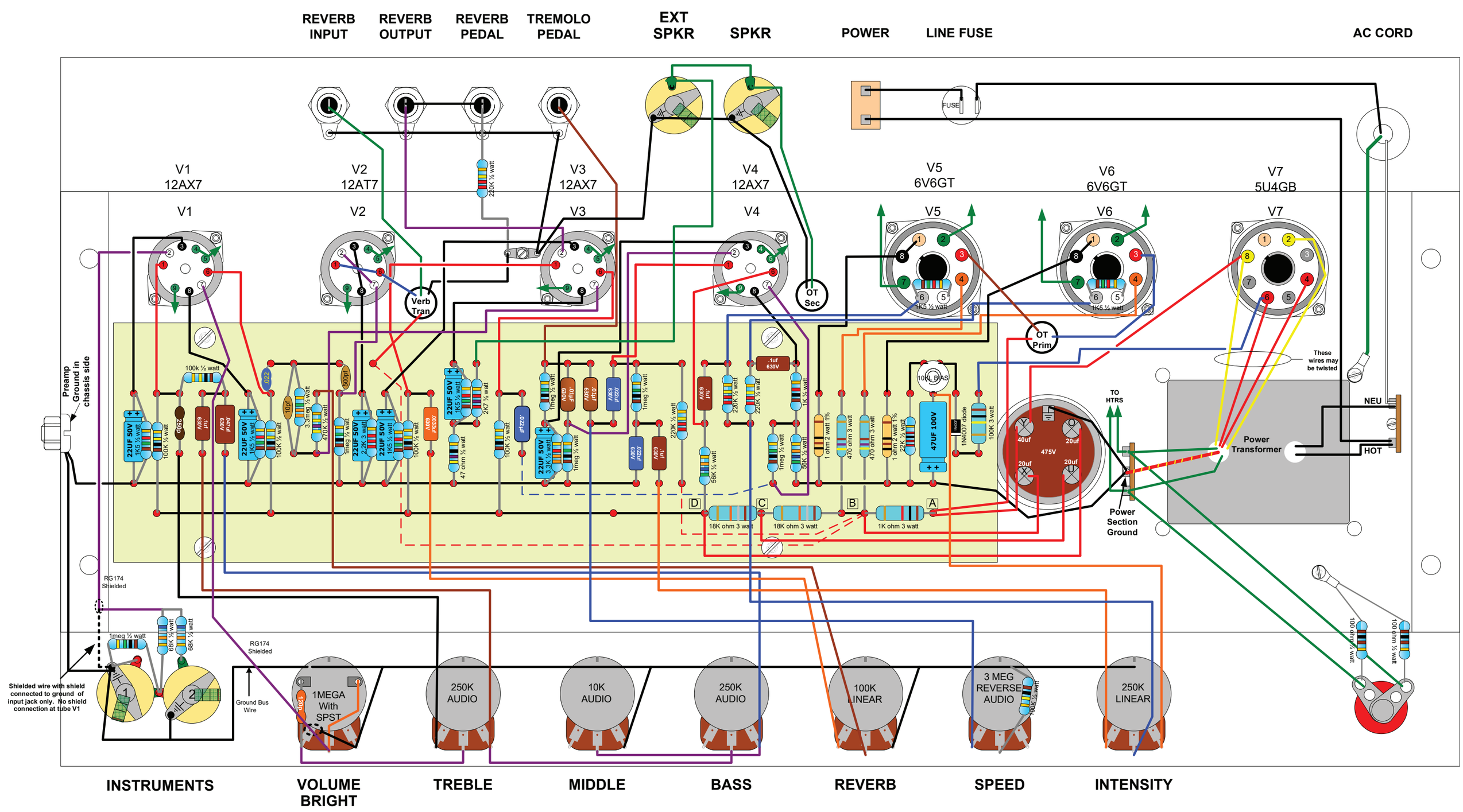
REVERB INPUT
REVERB OUTPUT
REVERB PEDAL
TREMOLO PEDAL
EXT SPKR
SPKR
POWER
LINE FUSE
AC CORD
FUSE
V1 12AX7
V2 12AT7
V3 12AX7
V4 12AX7
V5 6V6GT
V6 6V6GT
V7 5U4GB
V1
V2
V3
V4
V5
V6
V7
220K ½ watt
Verb Tran
OT Sec
OT Prim
1K5 ½ watt
10K L BAS
.1uf 630V
Preamp Ground in chassis side
100k ½ watt
22UF 50V
1K5 ½ watt
100K ½ watt
.1uf 630V
.0uf 630V
.022
10pf
3.3meg ½ watt
470K ½ watt
1meg ½ watt
22UF 50V
2.2K 3 watt
22UF 50V
1K5 ½ watt
100K ½ watt
.0022uf 630V
.01uf 630V
.022uf 630V
.1uf 630V
.0022uf 630V
.1uf 630V
47 ohm ½ watt
100K ½ watt
.01uf
22UF 50V
3.3K ½ watt
1meg ½ watt
220K ½ watt
56K ½ watt
220K ½ watt
220K ½ watt
1K ½ watt
1meg ½ watt
56K ½ watt
1 ohm 2 watt 1%
470 ohm 3 watt
470 ohm 3 watt
1 ohm 2 watt 1%
22K ½ watt
47UF 100V
1N4007 diode
100K 3 watt
475V
40uf
20uf
20uf
20uf
TO HTRS
Power Section Ground
Power Transformer
These wires may be twisted
NEU
HOT
D
C
B
A
18K ohm 3 watt
18K ohm 3 watt
1K ohm 3 watt
RG174 Shielded
1meg ½ watt
68K ½ watt
68K ½ watt
Shielded wire with shield connected to ground of input jack only. No shield connection at tube V1
RG174 Shielded
Ground Bus Wire
1MEGA With SPST
120p
250K AUDIO
10K AUDIO
250K AUDIO
100K LINEAR
3 MEG REVERSE AUDIO
100K ½ watt
250K LINEAR
100 ohm ½ watt
100 ohm ½ watt
INSTRUMENTS
VOLUME BRIGHT
TREBLE
MIDDLE
BASS
REVERB
SPEED
INTENSITY