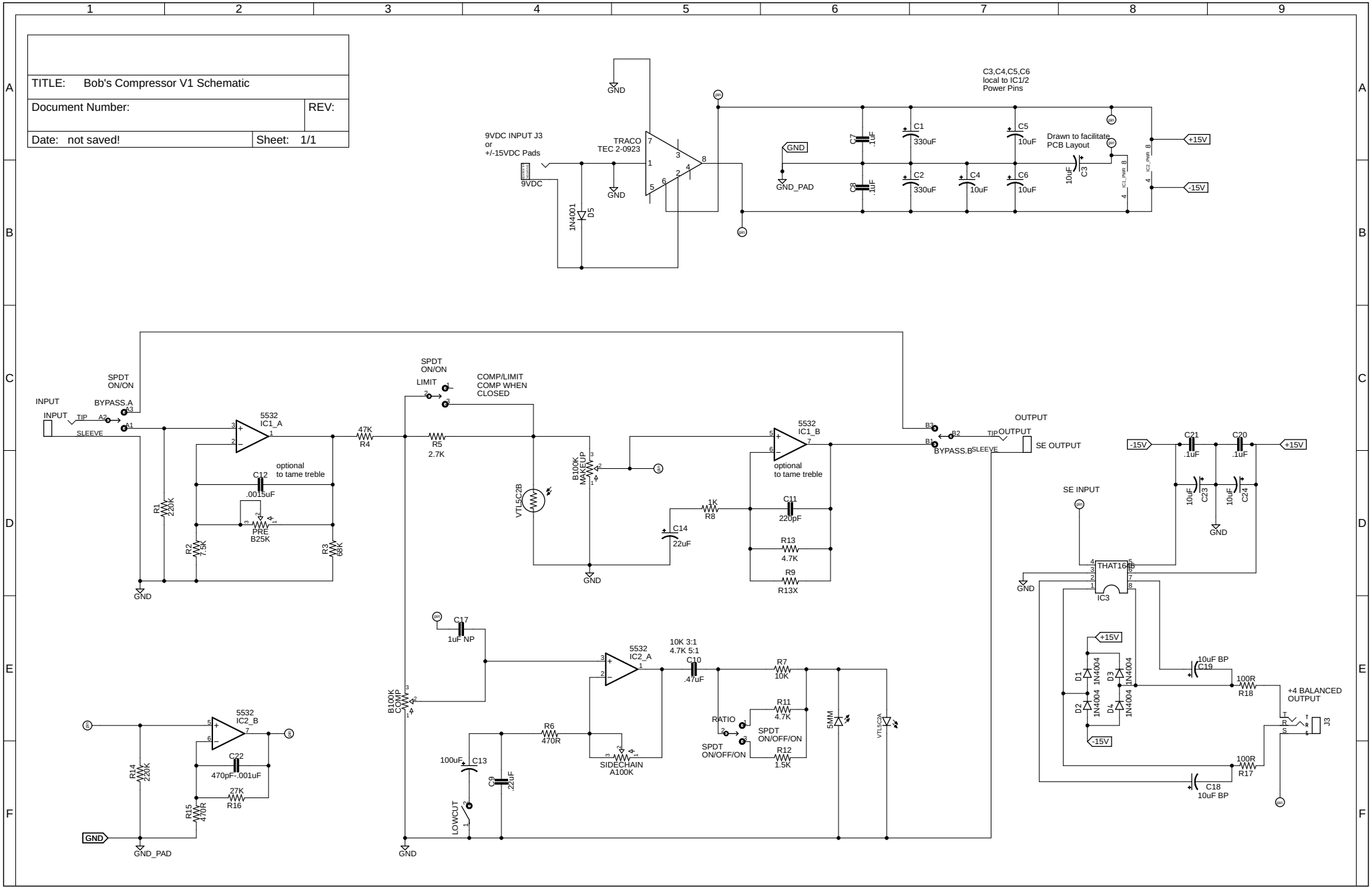TITLE: Bob's Compressor V1 Schematic	
Document Number:	REV:
Date: not saved!	Sheet: 1/1