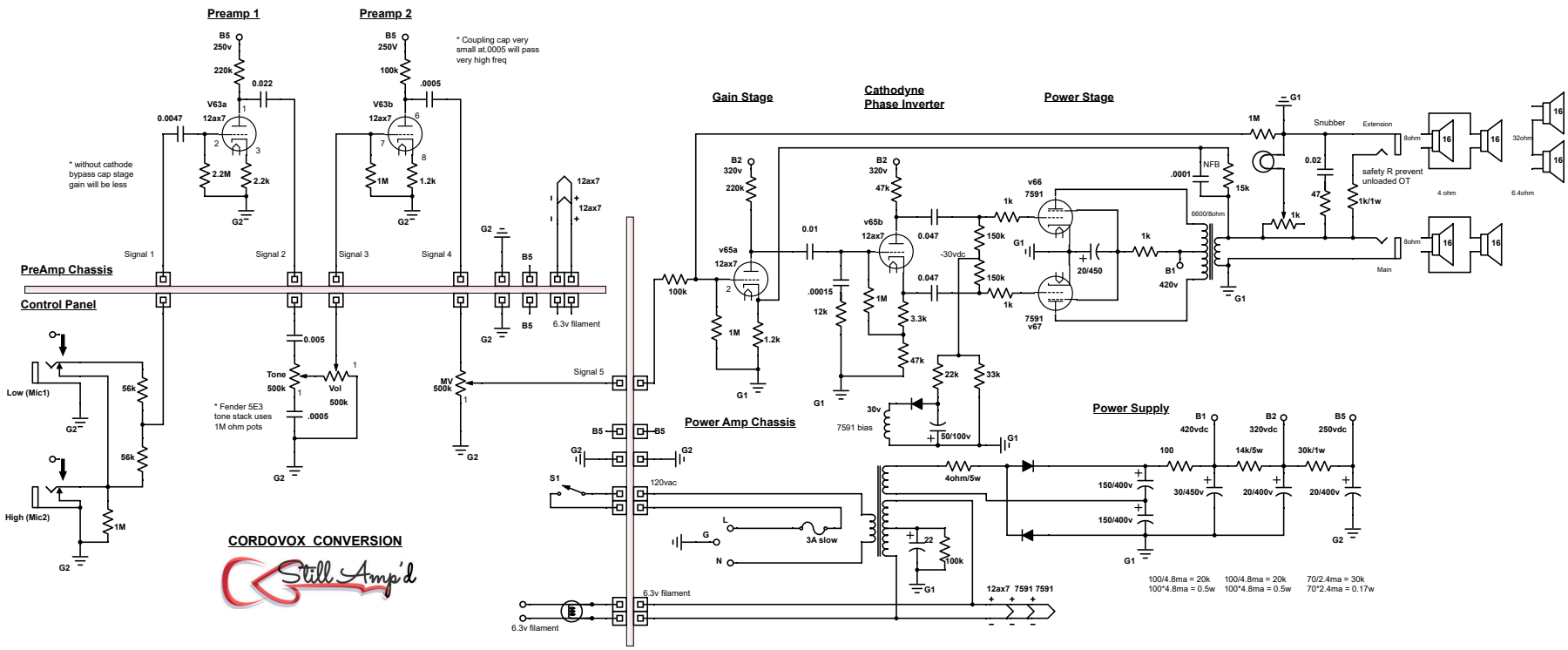
Preamp 1
Preamp 2
B5 250v
220k
0.022
V63a
12ax7
0.0047
2.2M
2.2k
G2
* without cathode bypass cap stage gain will be less
B5 250V
100k
.0005
V63b
12ax7
1M
1.2k
* Coupling cap very small at.0005 will pass very high freq
Signal 1
Signal 2
Signal 3
Signal 4
Signal 5
PreAmp Chassis
Control Panel
Low (Mic1)
High (Mic2)
56k
1M
0.005
Tone 500k
Vol 500k
.0005
* Fender 5E3 tone stack uses 1M ohm pots
MV 500k
B5
6.3v filament
12ax7
Gain Stage
Cathodyne Phase Inverter
Power Stage
B2 320v
220k
v65a
12ax7
100k
1M
1.2k
G1
0.01
.00015
12k
v65b
12ax7
47k
0.047
1M
3.3k
-30vdc
150k
1k
v66 7591
v67 7591
20/450
NFB
.0001
15k
6600/8ohm
B1 420v
1M
Snubber
Extension
0.02
47
1k
1k/1w
safety R prevent unloaded OT
8ohm
16
32ohm
4 ohm
6.4ohm
Main
22k
33k
30v
7591 bias
50/100v
Power Amp Chassis
S1
120vac
L
G
N
3A slow
22
100k
4ohm/5w
Power Supply
B1 420vdc
B2 320vdc
B5 250vdc
100
14k/5w
30k/1w
150/400v
30/450v
20/400v
20/400v
100/4.8ma = 20k
100*4.8ma = 0.5w
100/4.8ma = 20k
100*4.8ma = 0.5w
70/2.4ma = 30k
70*2.4ma = 0.17w
12ax7 7591 7591
6.3v filament
CORDOVOX CONVERSION
Still Amp'd