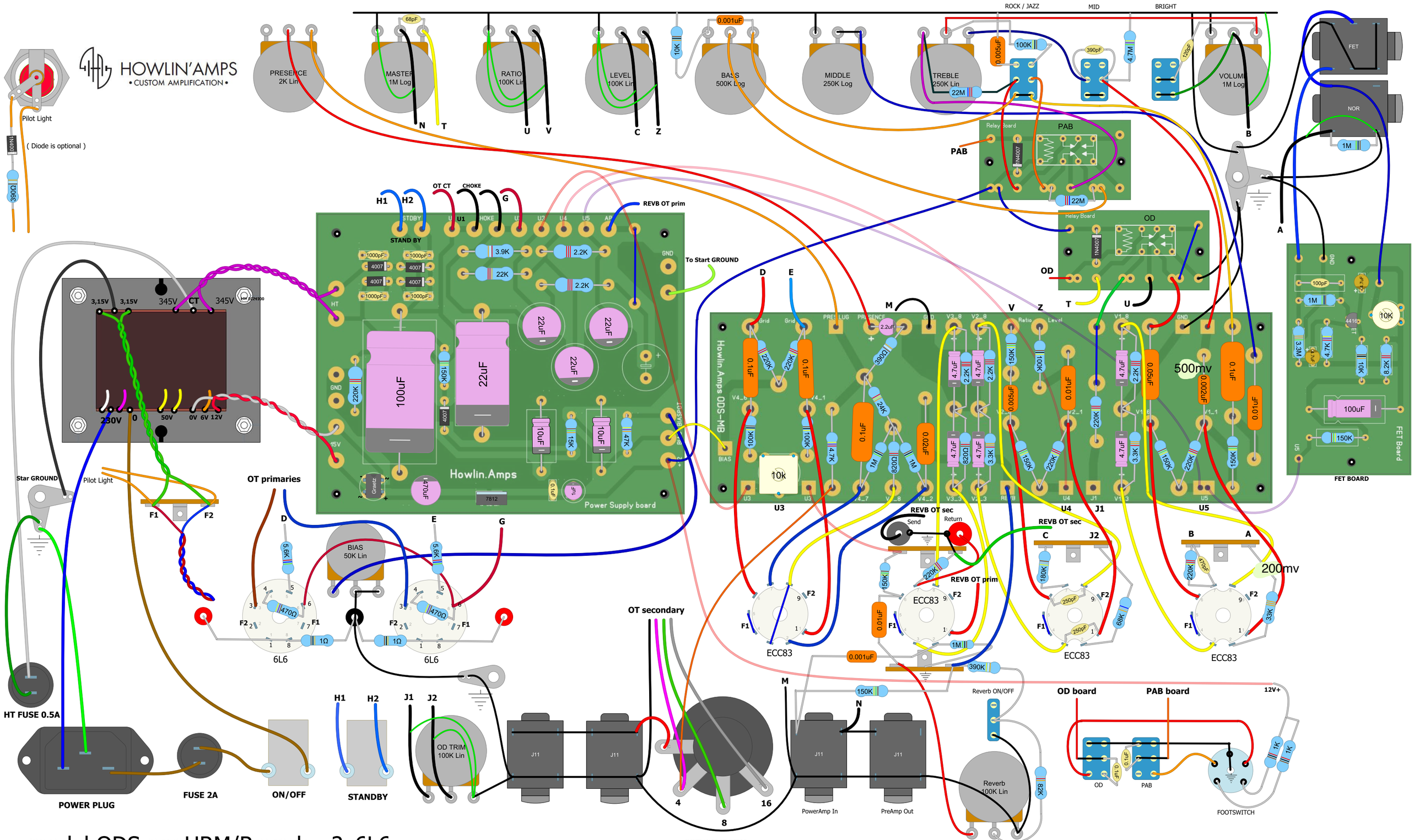

model ODS nonHRM/Reverb - 2x6L6