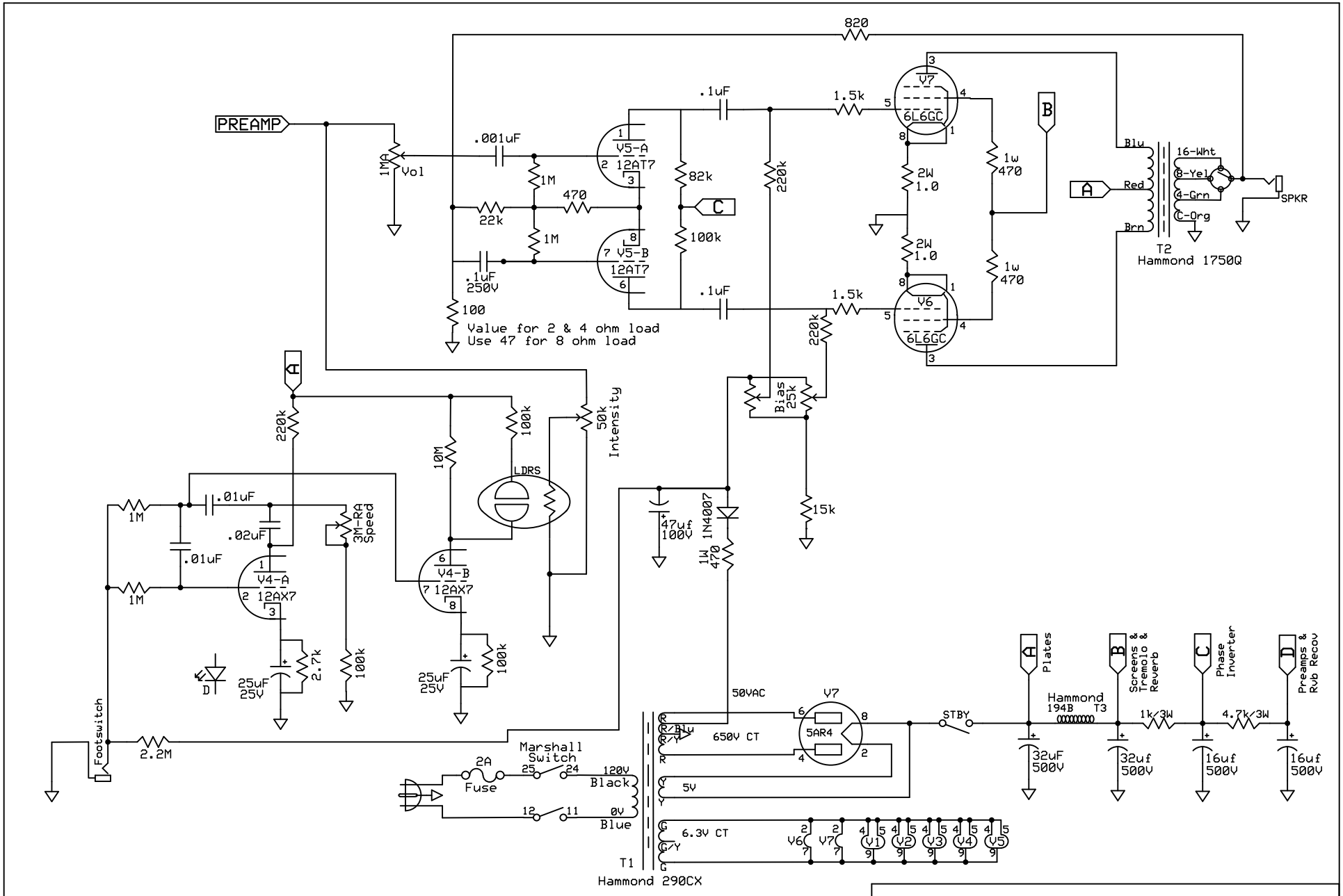

RoadShow		
AB763 BA ver - Power & Trem		
Bill Anderson	Rev 4.0 09/30/2025	DUAL BIAS