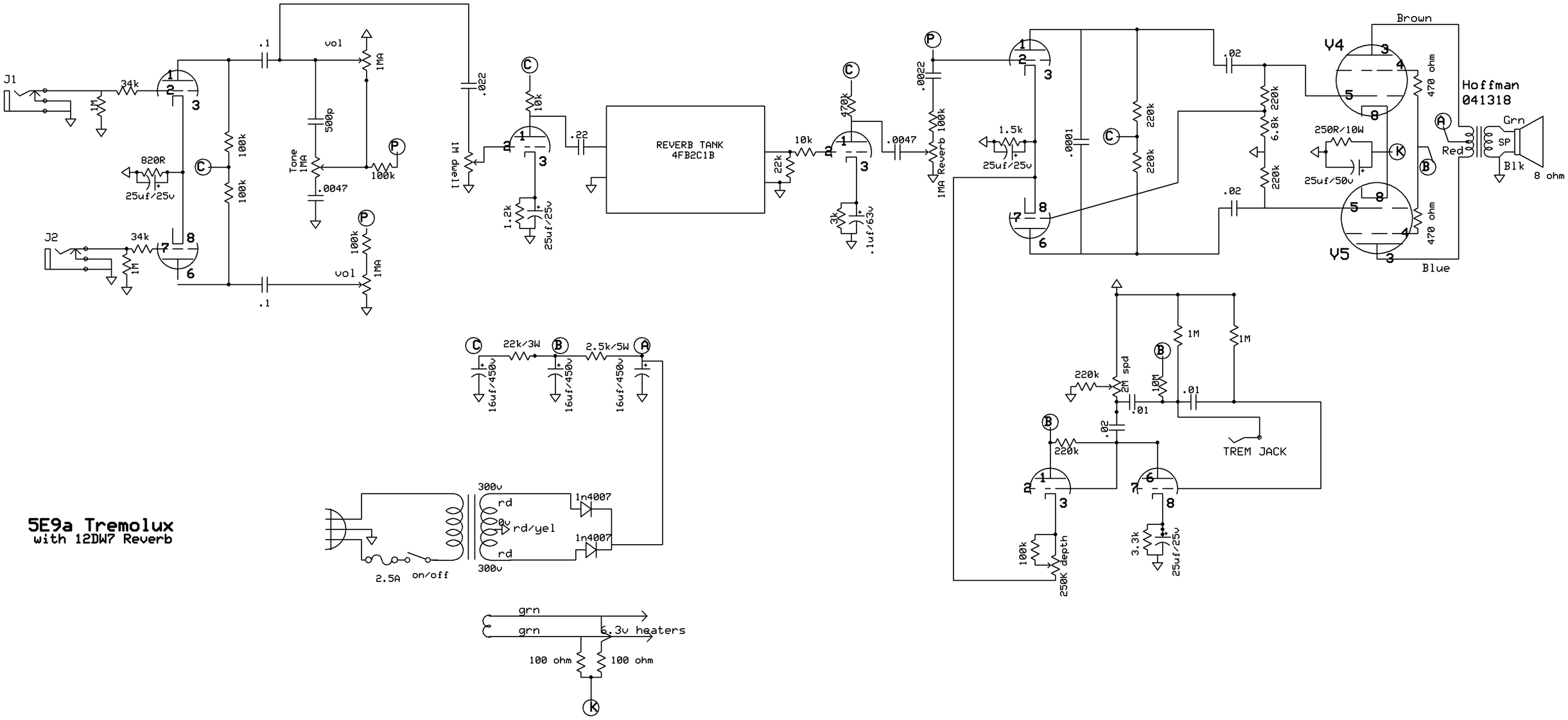

5E9a Tremolux
with 12DW7 Reverb