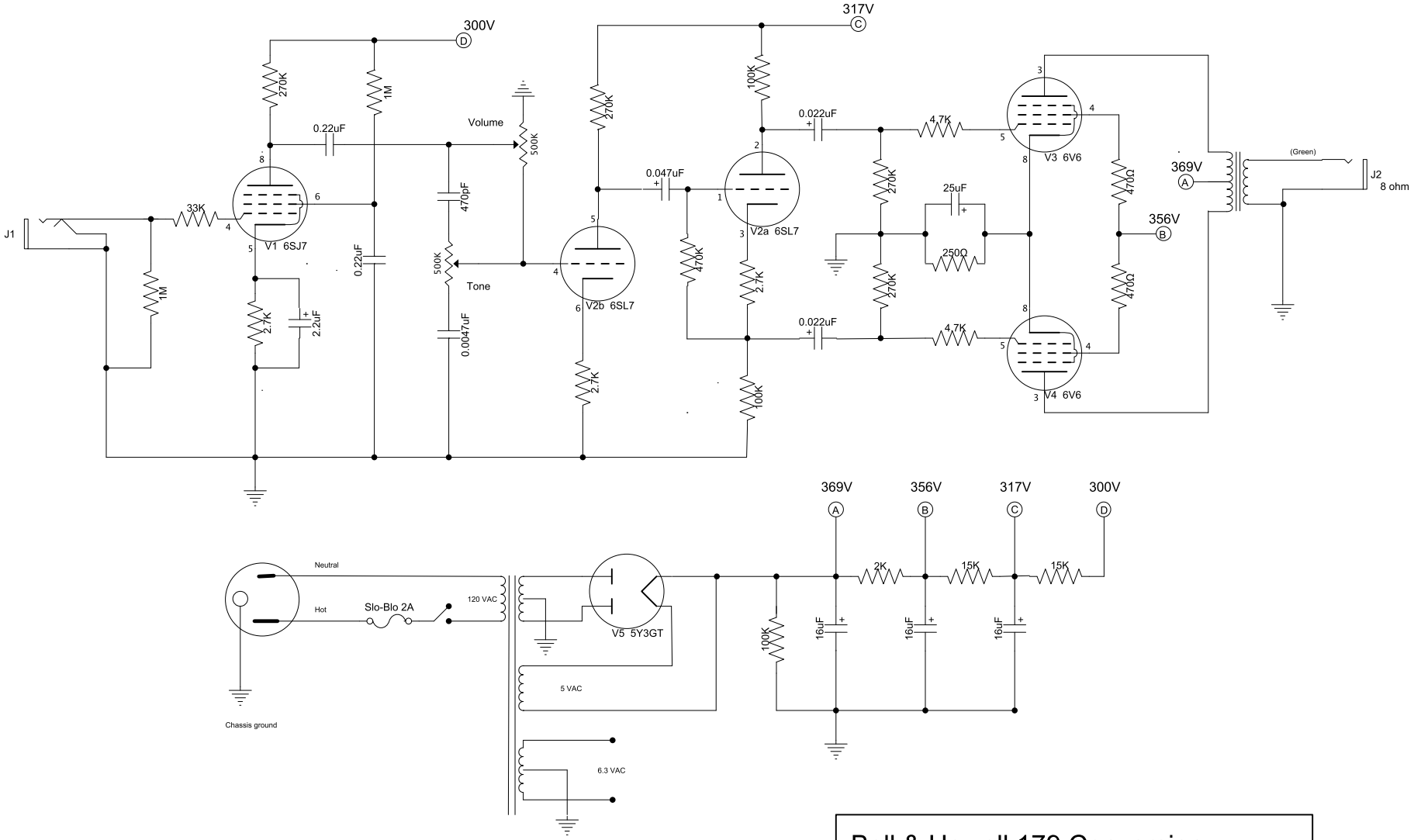

Bell & Howell 179 Conversion

Date: 12/25/2025