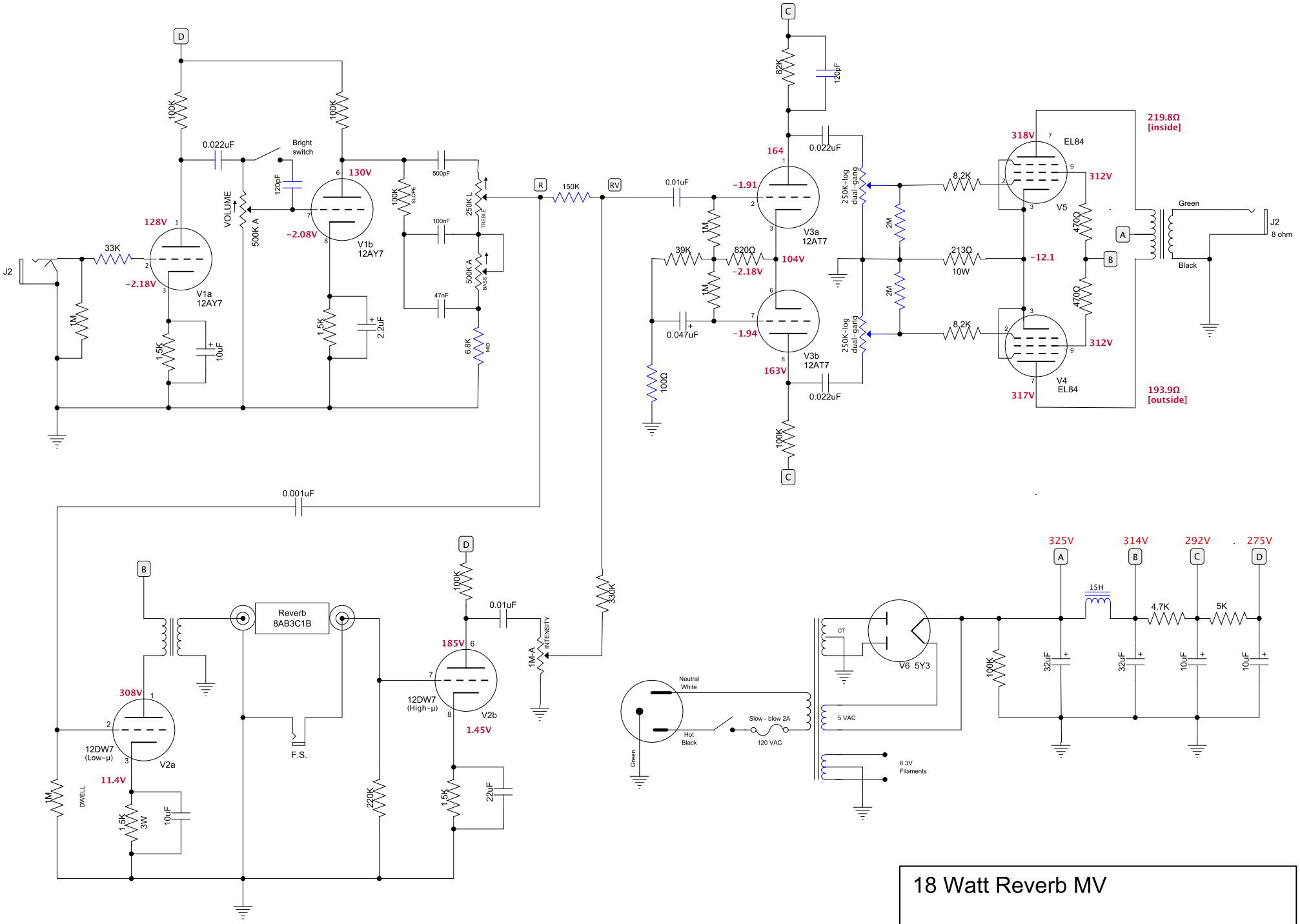


# 18 Watt Reverb MV

Voltages recorded at 121 VAC mains voltage

| | |
|---|---|
| 07/24/2024 | design suggested by tubenit |