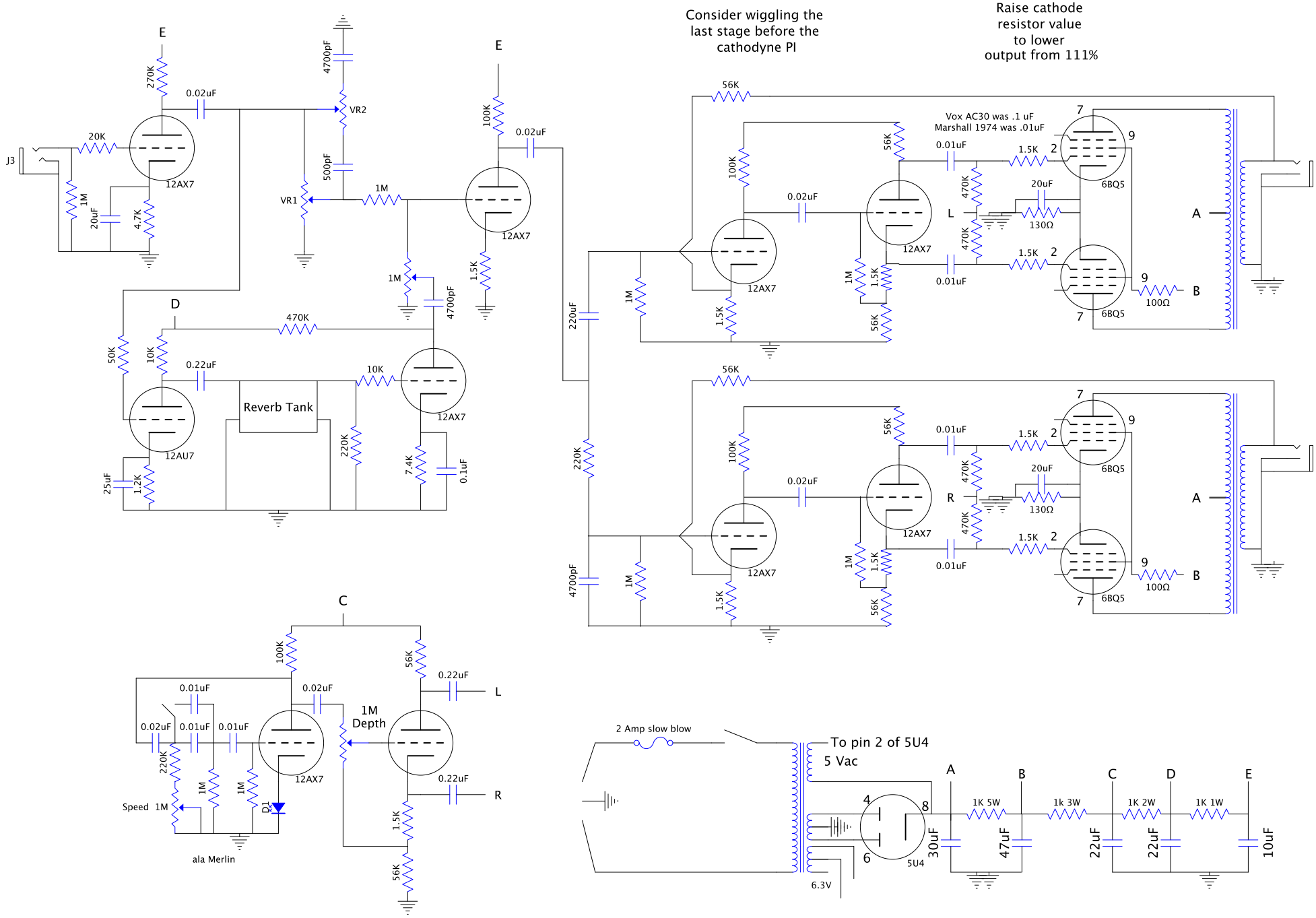

All Measurements taken between that junction and ground, ecxept between rectifier 5.2v and 6.4v heaters.