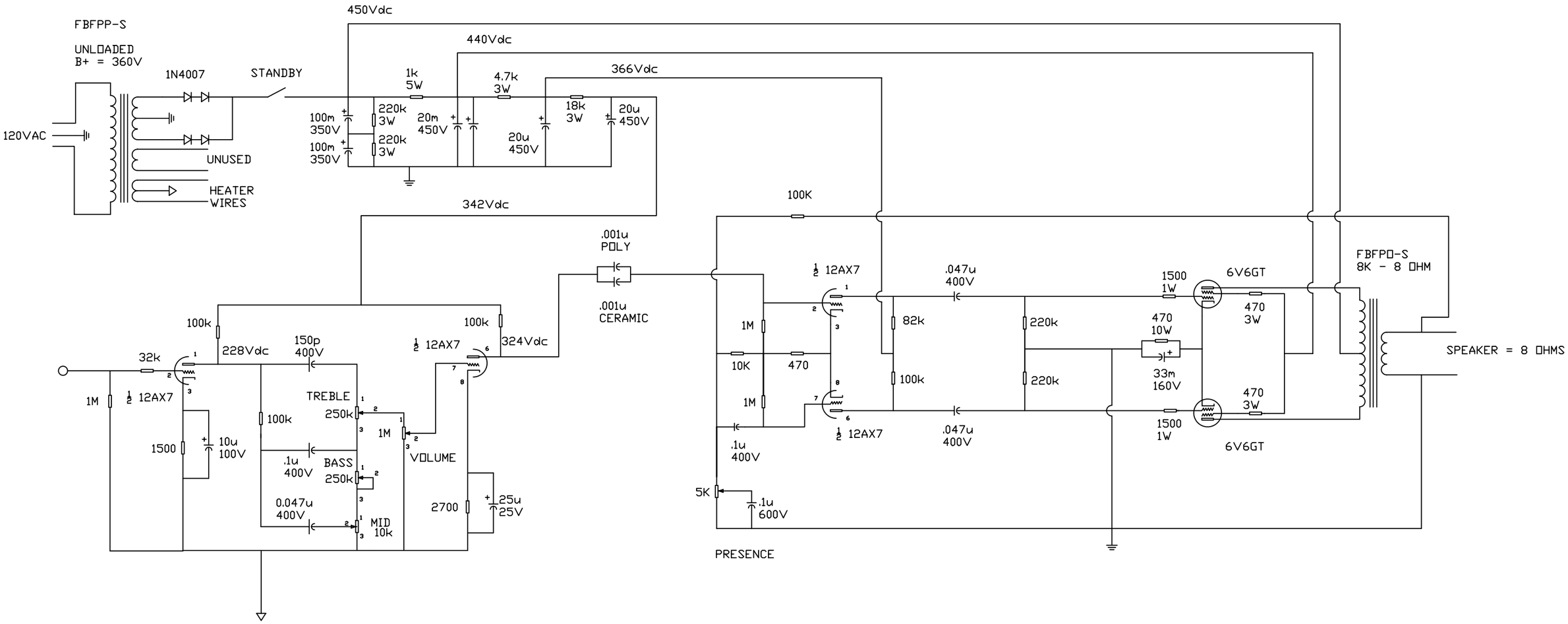
FBFPP-S
UNLOADED
B+ = 360V
120VAC
1N4007
STANDBY
UNUSED
HEATER
WIRES
450Vdc
440Vdc
366Vdc
342Vdc
1k
5W
4.7k
3W
18k
3W
20u
450V
100m
350V
220k
3W
20m
450V
.001u
POLY
.001u
CERAMIC
100K
½ 12AX7
.047u
400V
1500
1W
6V6GT
470
3W
470
10W
33m
160V
82k
220k
100k
1M
10K
470
.1u
400V
5K
.1u
600V
PRESENCE
FBFPO-S
8K - 8 OHM
SPEAKER = 8 OHMS
100k
228Vdc
150p
400V
324Vdc
32k
1M
1500
10u
100V
TREBLE
250k
BASS
250k
MID
10k
VOLUME
0.047u
400V
2700
25u
25V