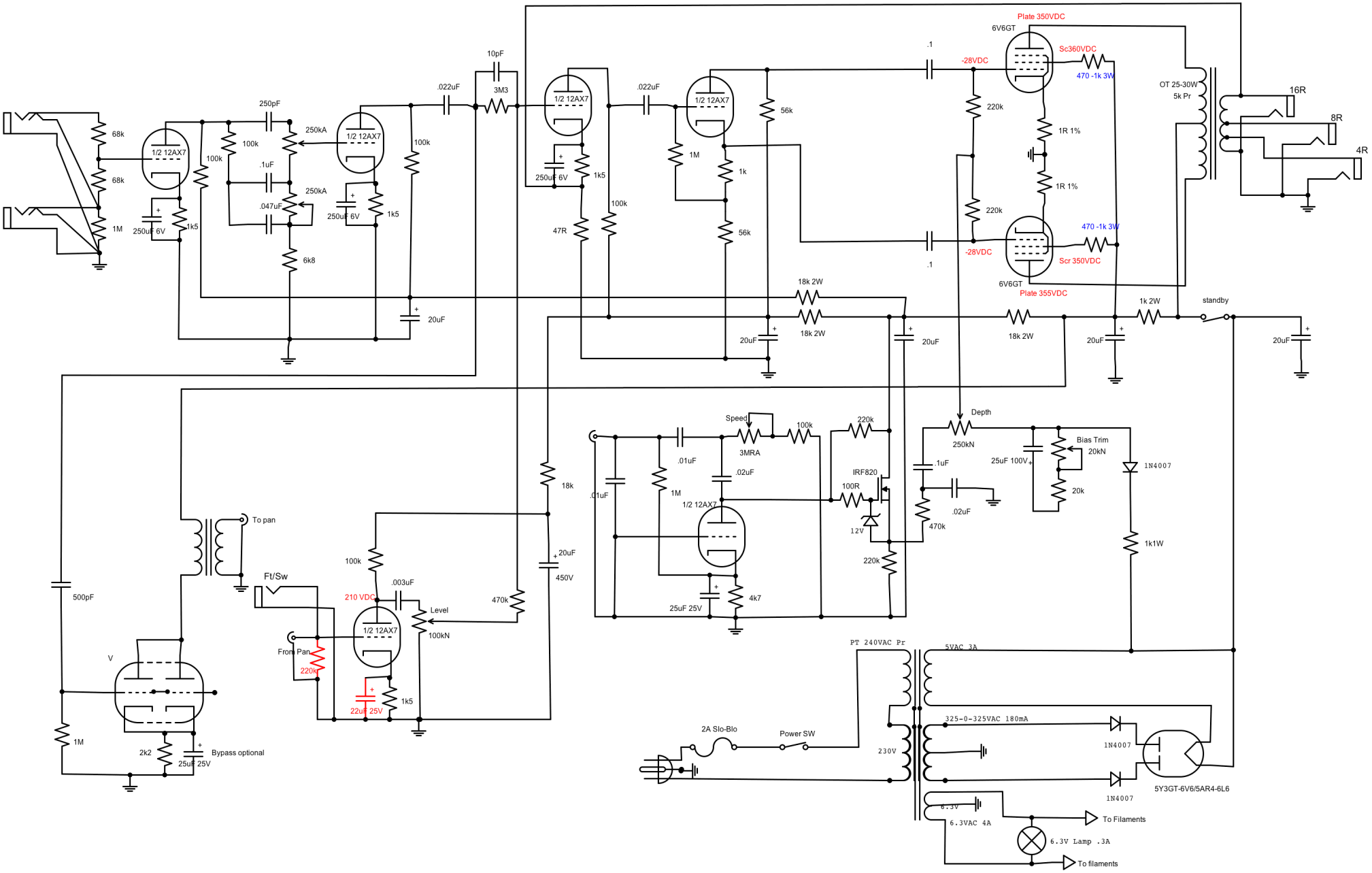

AA1164		
Schematic Name		
Tubeswell	Rev 1.0 3/14/10	Page #