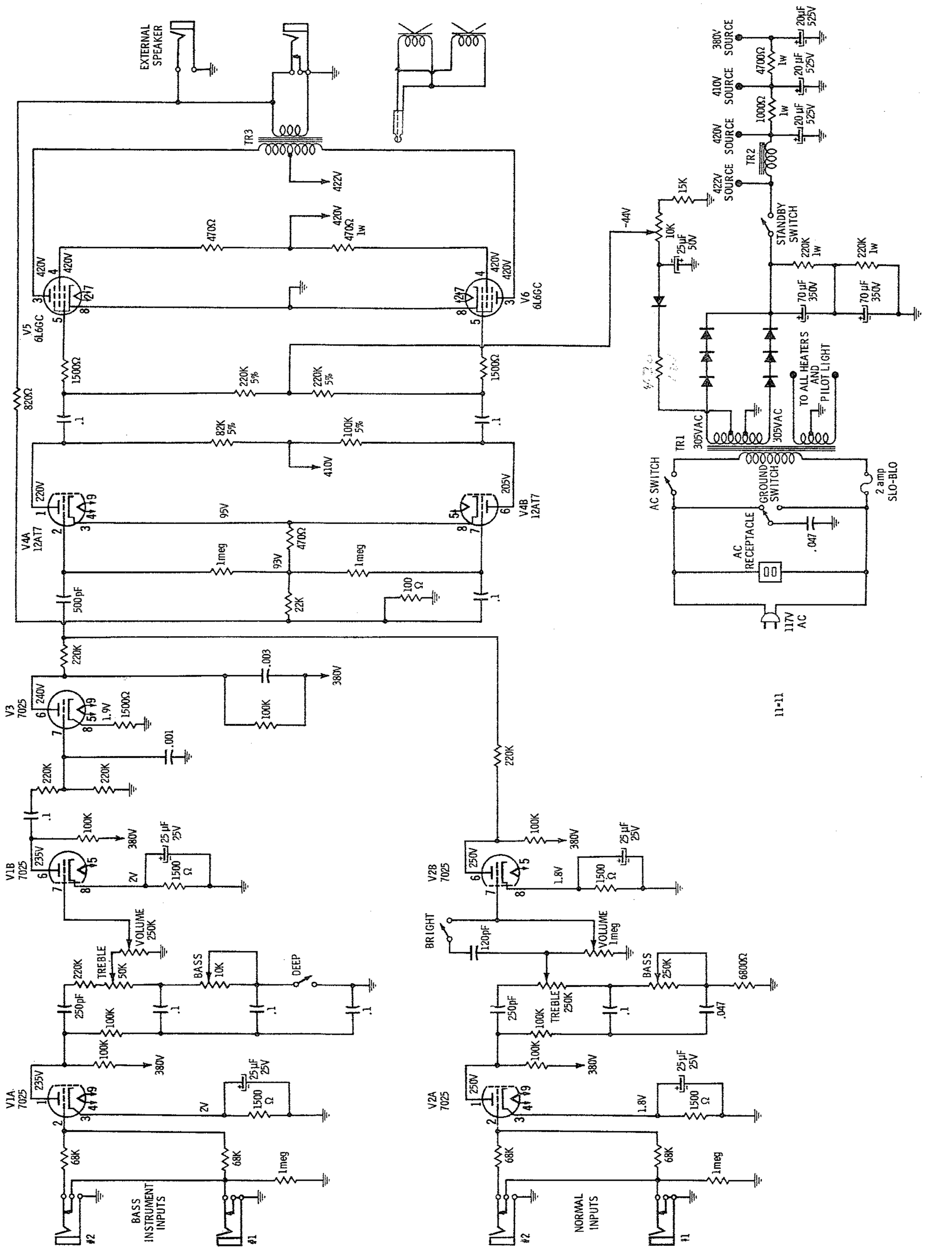

Fender Model AA-864