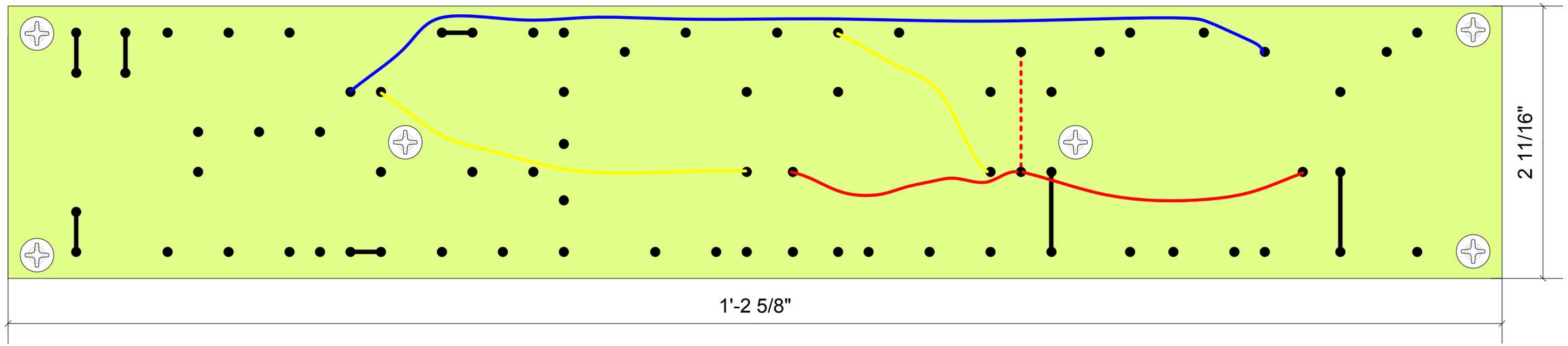

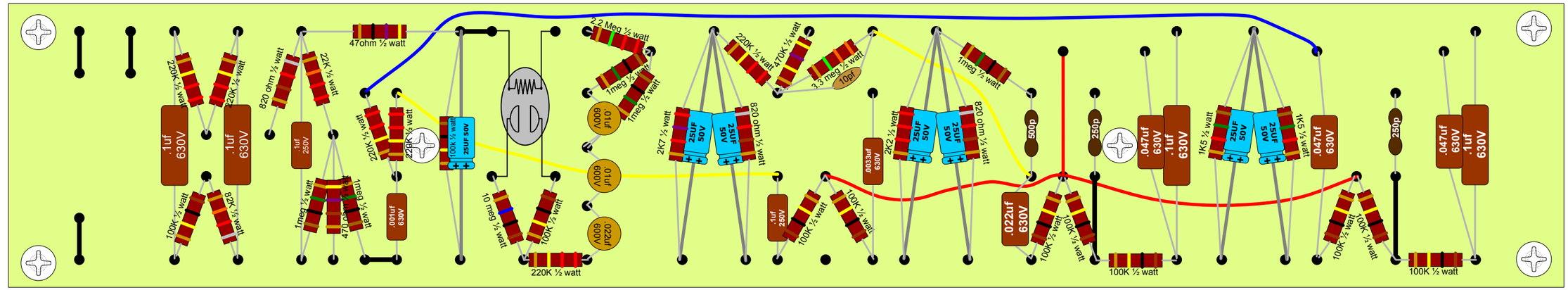

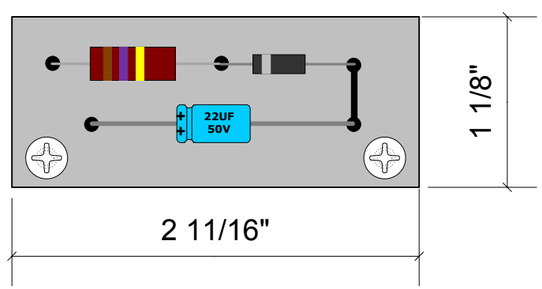
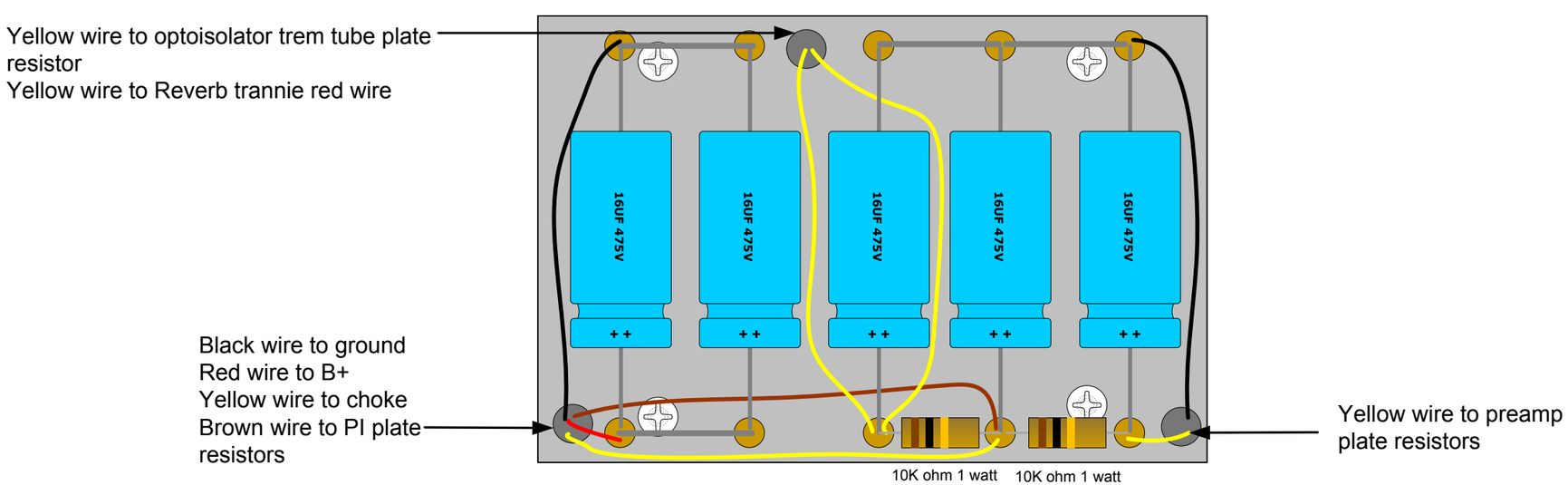
Fender AB763
Deluxe Reverb Board layouts