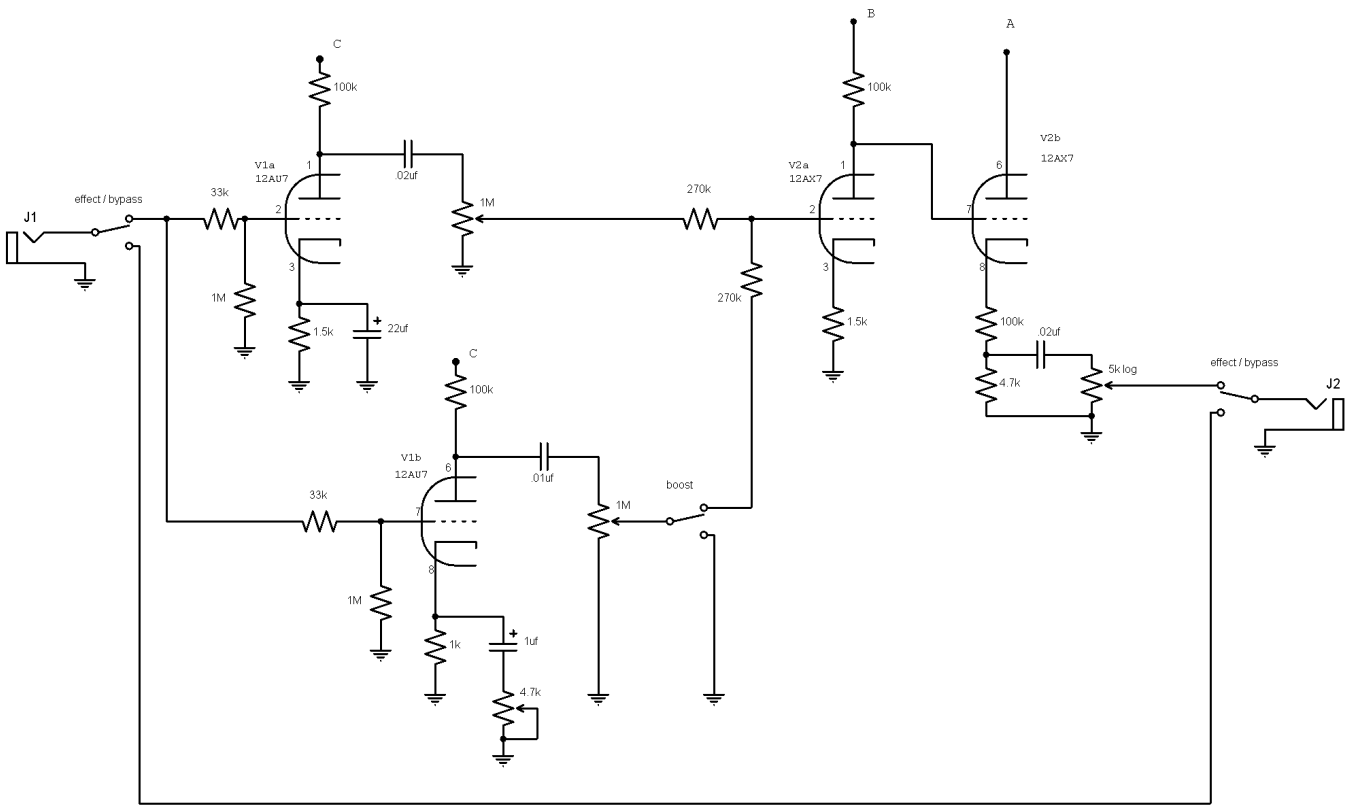

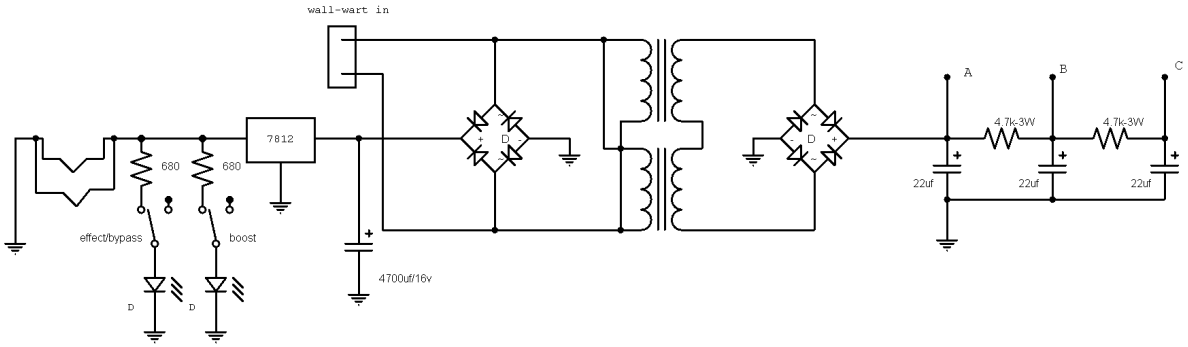

Company Name		
Schematic Name		
ganders3	Rev 1.0 2010-07-28	Page #