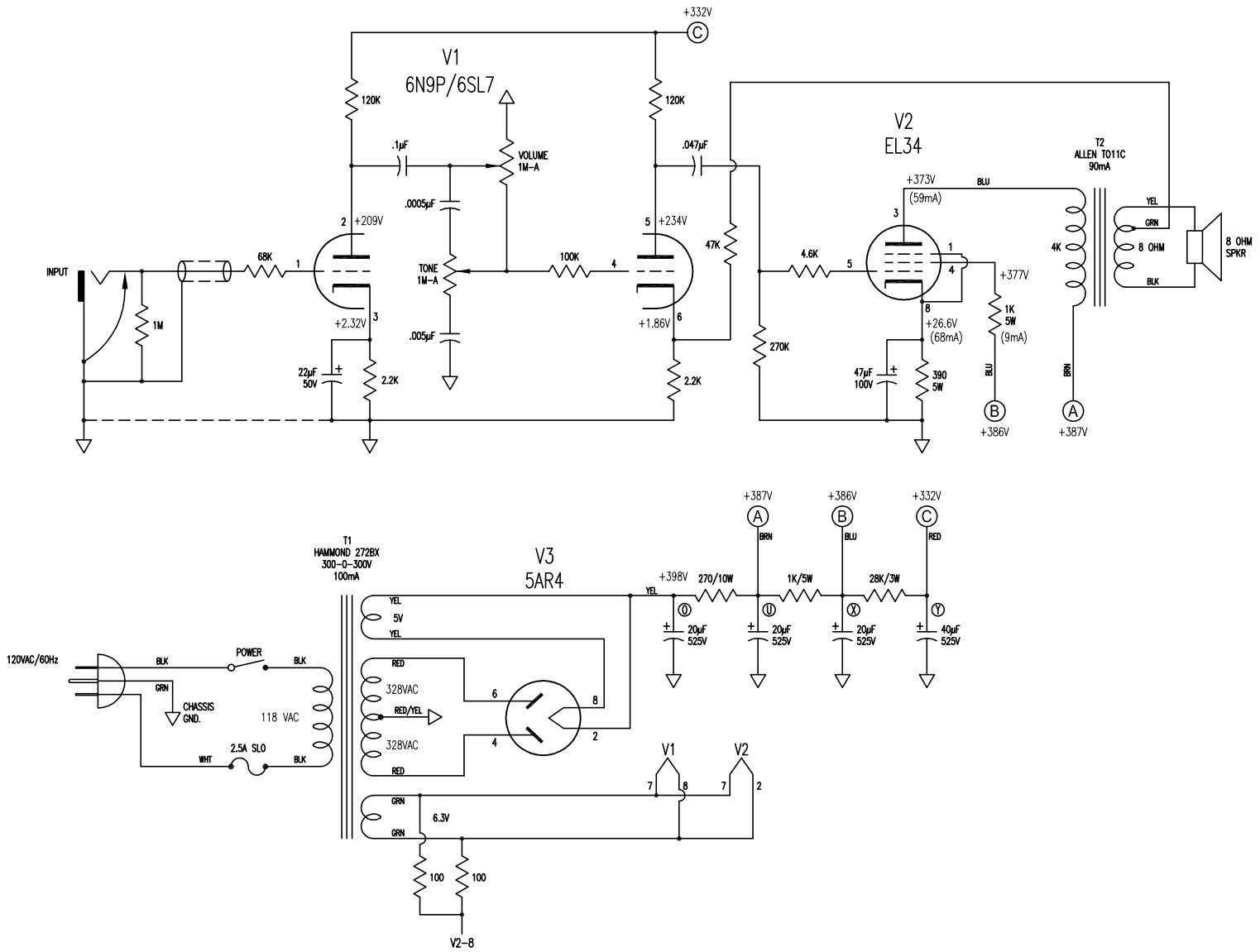

V1A		
Va	+206.7 V	
Vk	+2.32 V	
Ik	1 mA	
Ia	1 mA	
Pa	206 mW	
V1B		
Va	+232.1 V	
Vk	+1.86 V	
Ik	0.8 mA	
Ia	0.8 mA	
Pa	186 mW	
V2		
Va	+346.4 V	
Vg2	+377 V	
Vk	+26.6 V	
Ik	68 mA	
Ia	59 mA	
Ig2	9 mA	
Pa	20.4 W	

REV	DATE	DESCRIPTION	CODE
2	2-10-09	ADDED V1B GRID-STOPPER	JDK
1	2-04-09	AS-BUILT	JDK
0	1-27-09	ISSUED FOR CONSTRUCTION	JDK

AUDET CUSTOM ELECTRONICS
WARREN, RI

SE EL34 HARP AMPLIFIER
SCHEMATIC DIAGRAM

DRAWN BY: J. KELLY	DATE:12/31/08	REV:	A
FILENAME: ACE-HAWK1	DWG NO: ACEHAWK1		