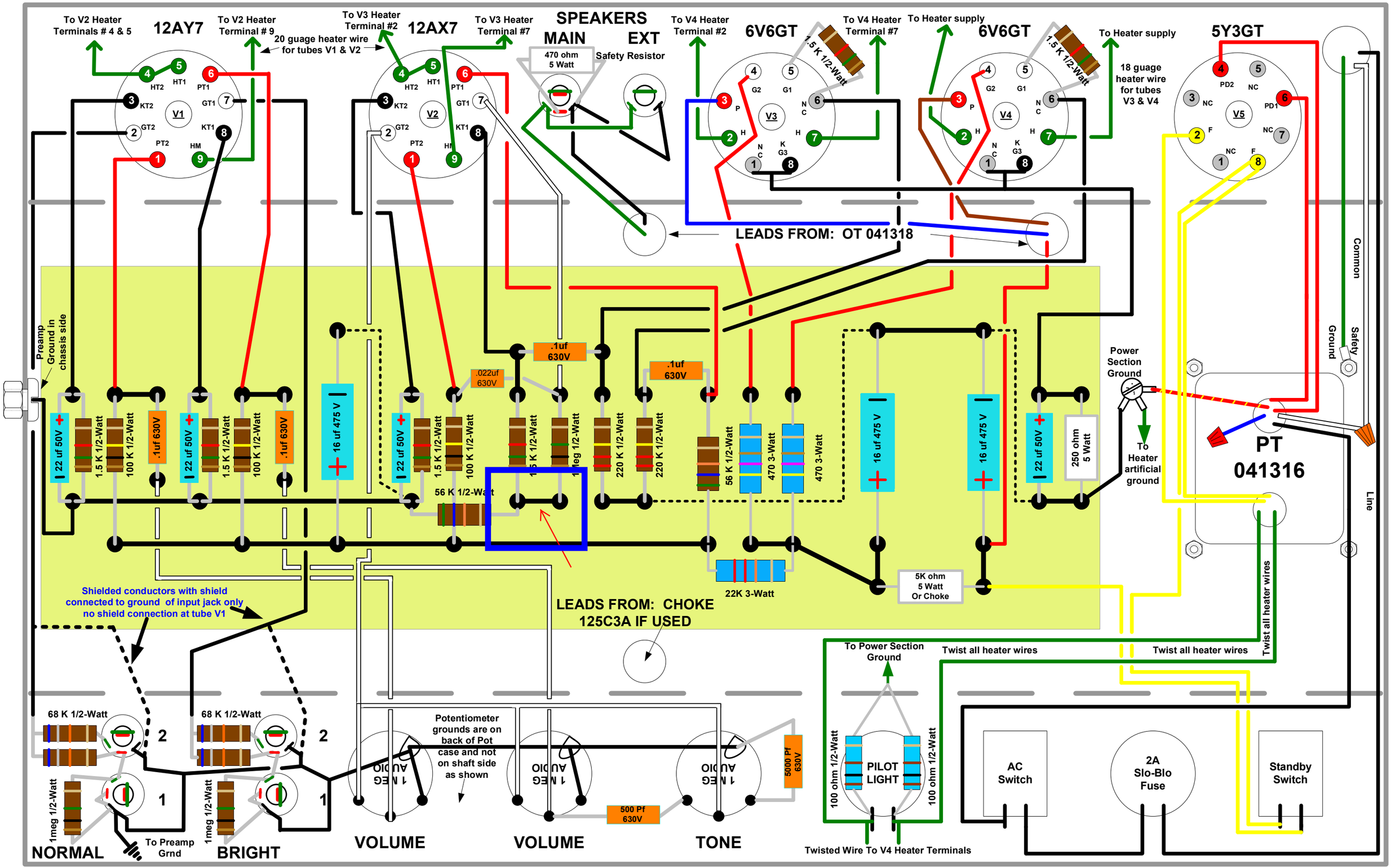
To V2 Heater Terminals # 4 & 5
12AY7
To V2 Heater Terminal # 9
20 guage heater wire for tubes V1 & V2
To V3 Heater Terminal #2
12AX7
To V3 Heater Terminal #7
SPEAKERS
MAIN
EXT
470 ohm 5 Watt
Safety Resistor
To V4 Heater Terminal #2
6V6GT
1.5 K 1/2-Watt
To V4 Heater Terminal #7
To Heater supply
6V6GT
1.5 K 1/2-Watt
To Heater supply
18 guage heater wire for tubes V3 & V4
5Y3GT
LEADS FROM: OT 041318
Preamp Ground in chassis side
22 uf 50V
1.5 K 1/2-Watt
100 K 1/2-Watt
.1uf 630V
16 uf 475 V
.022uf 630V
.1uf 630V
56 K 1/2-Watt
1meg 1/2-Watt
220 K 1/2-Watt
56 K 1/2-Watt
470 3-Watt
470 3-Watt
16 uf 475 V
16 uf 475 V
22 uf 50V
250 ohm 5 Watt
Power Section Ground
To Heater artificial ground
PT 041316
Common
Safety Ground
Line
22K 3-Watt
5K ohm 5 Watt Or Choke
Shielded conductors with shield connected to ground of input jack only no shield connection at tube V1
LEADS FROM: CHOKE 125C3A IF USED
Twist all heater wires
Twist all heater wires
Twist all heater wires
68 K 1/2-Watt
68 K 1/2-Watt
1meg 1/2-Watt
1meg 1/2-Watt
NORMAL
To Preamp Grnd
BRIGHT
Potentiometer grounds are on back of Pot case and not on shaft side as shown
1 MEG AUDIO
1 MEG AUDIO
1 MEG AUDIO
500 Pf 630V
5000 Pf 630V
VOLUME
VOLUME
TONE
To Power Section Ground
100 ohm 1/2-Watt
PILOT LIGHT
100 ohm 1/2-Watt
Twisted Wire To V4 Heater Terminals
AC Switch
2A Slo-Blo Fuse
Standby Switch