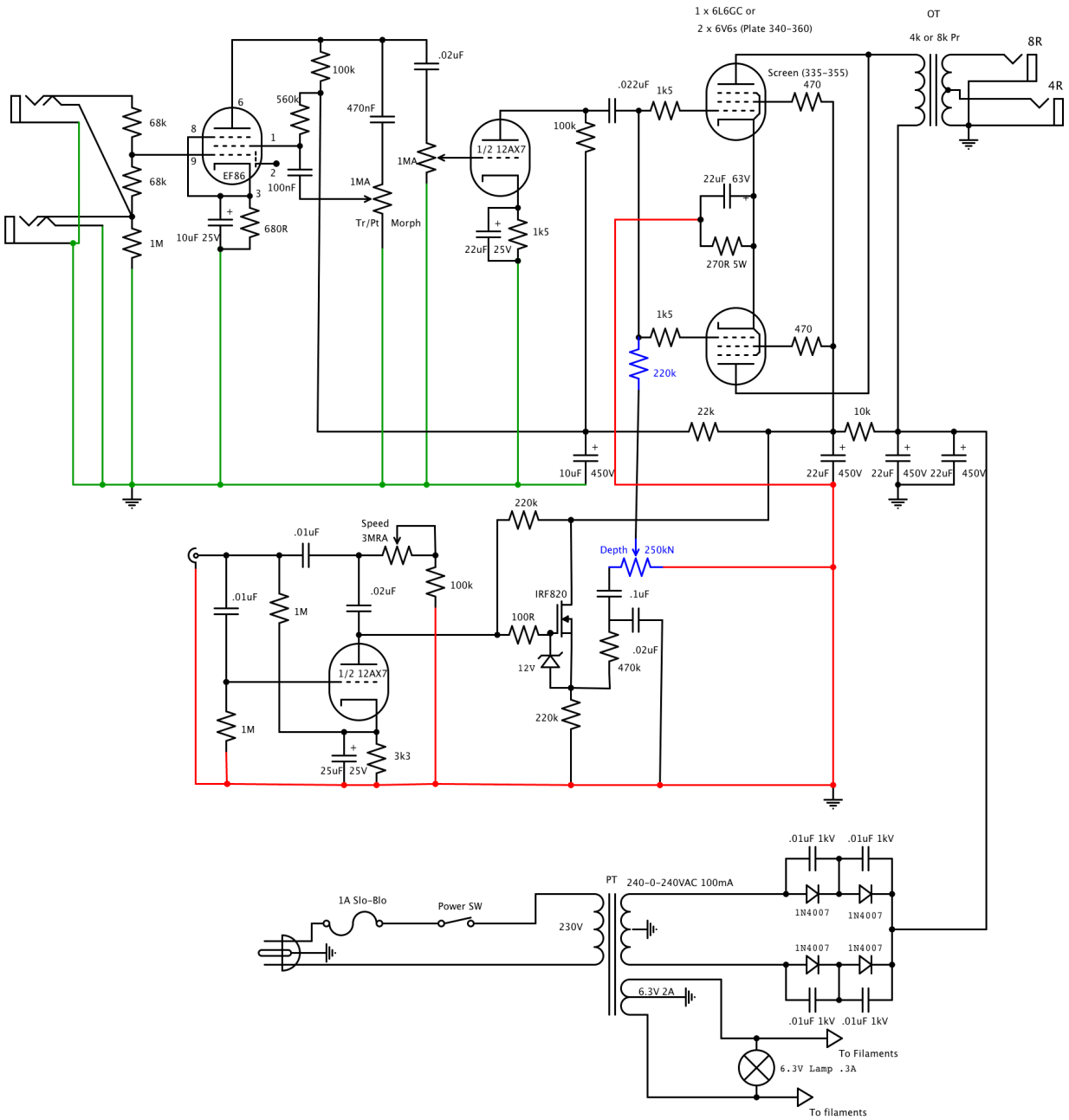

Super SE AC4		
for 1 x 6L6 or 2 x 6V6		
tubeswell	Rev 1.0 2010-12-27	Page #