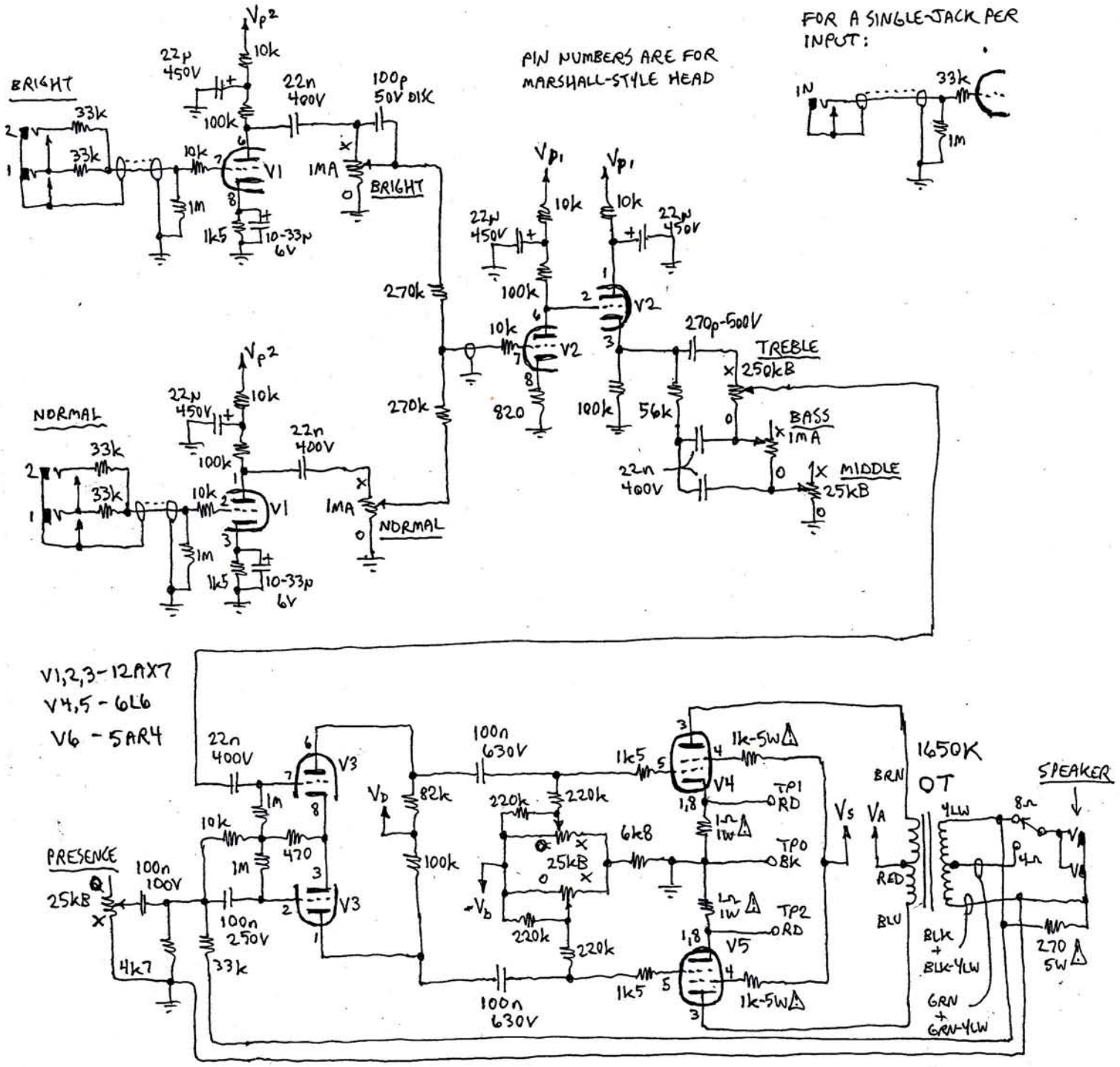

Fig. 6-20: Improved 5F6 with Noise Reduction Added