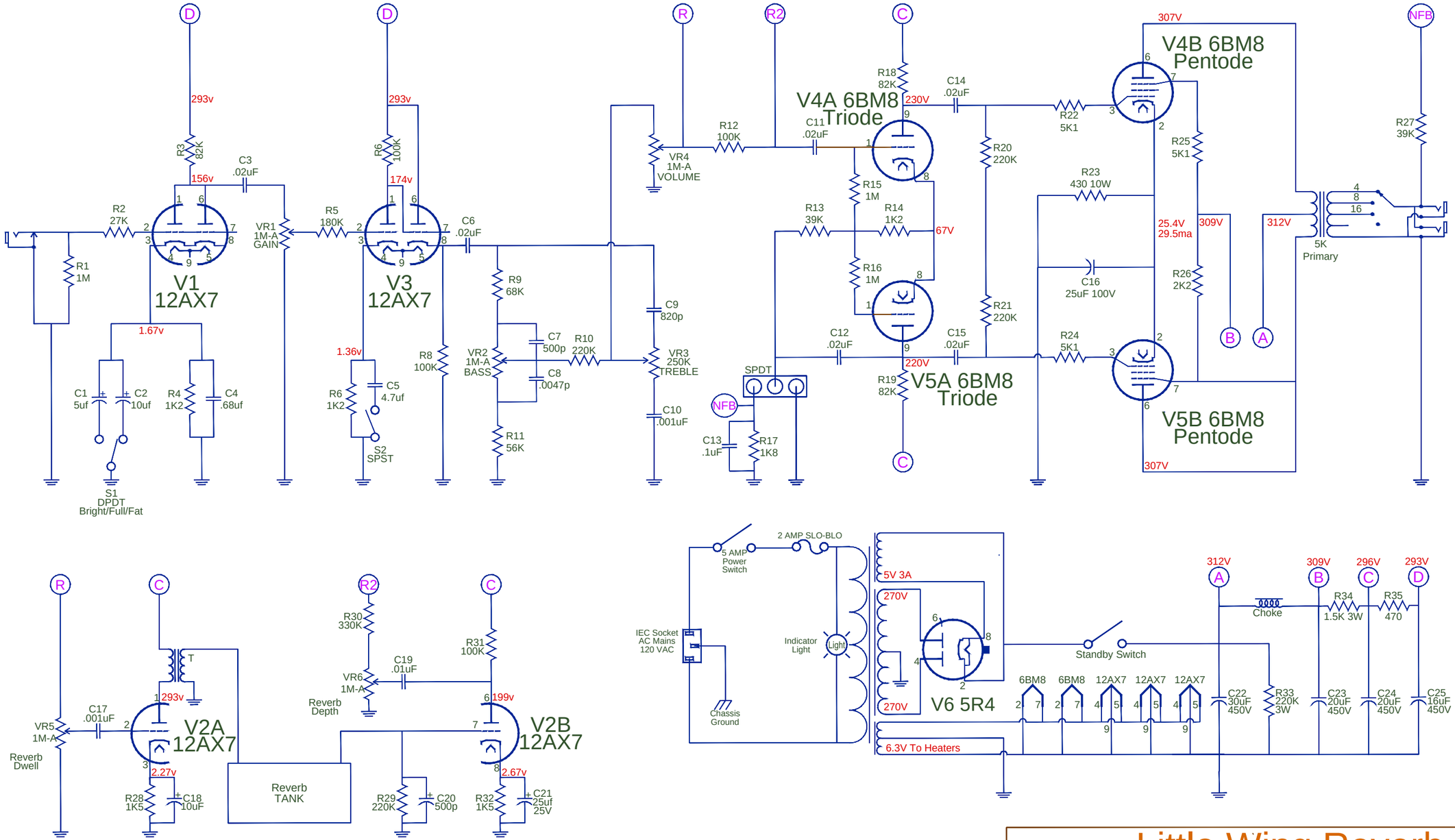

TUBE VOLTAGE CHART

		PIN 1	PIN 2	PIN 3	PIN 4	PIN 5	PIN 6	PIN 7	PIN 8	PIN 9
V1	12AX7	156	N/A	1.67	HTR	HTR	156	N/A	1.35	HTR
V2	12AX7	293	N/A	2.27	HTR	HTR	293	N/A	176	HTR
V3	12AX7	264	N/A	1.67	HTR	HTR	199	N/A	71	HTR
V4	6BM8	N/A	25.4	N/A	HTR	HTR	307	295	67	HTR
V5	6BM8	N/A	25.4	N/A	HTR	HTR	307	295	67	HTR

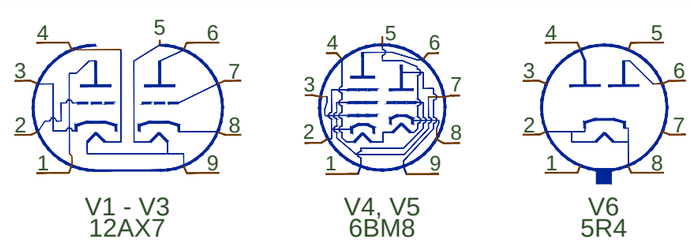

Little Wing Reverb

7 Watt Push/Pull 6GM8 Amplifier

Designed By: Geezer

Notes:

Drawn By: Trey Caldwell

SIZE: 11" X 17" | Drawing Number: 1 of 2 | Date: 2/29/2011 | Rev: