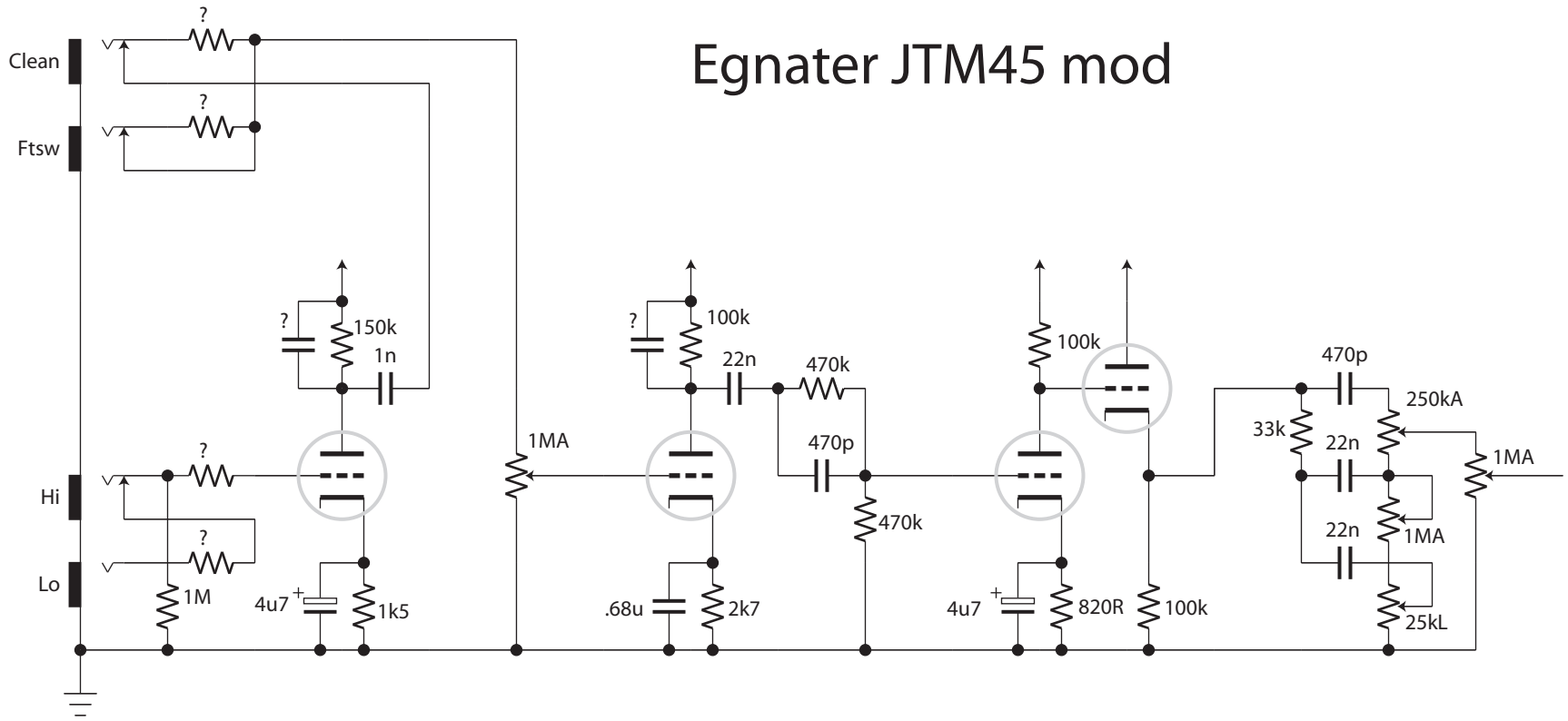Egnater JTM45 mod