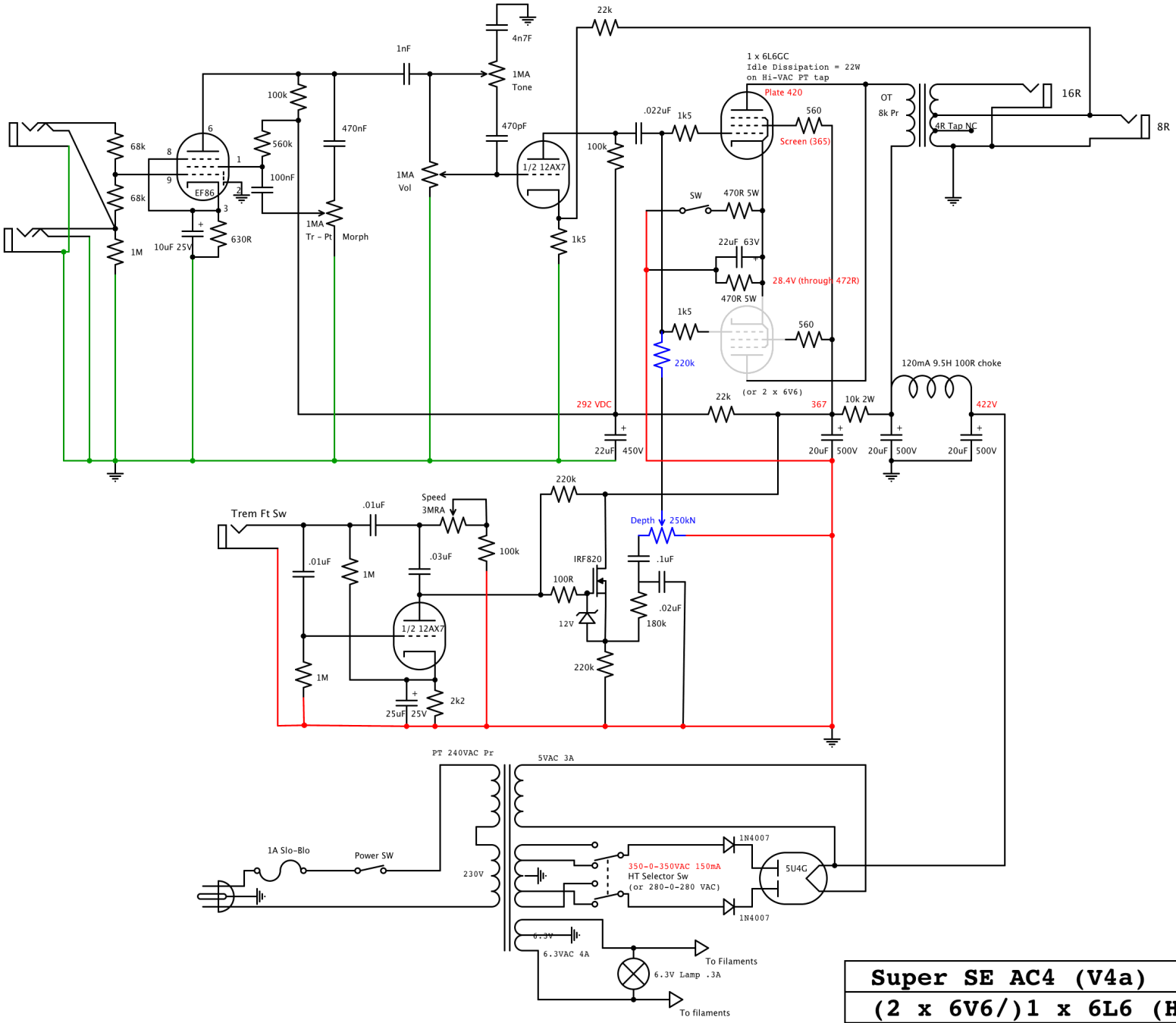

Super SE AC4 (V4a)		
(2 x 6V6/)1 x 6L6 (High HT)		
tubeswell	Rev 6.0 2011-03-06	Page #