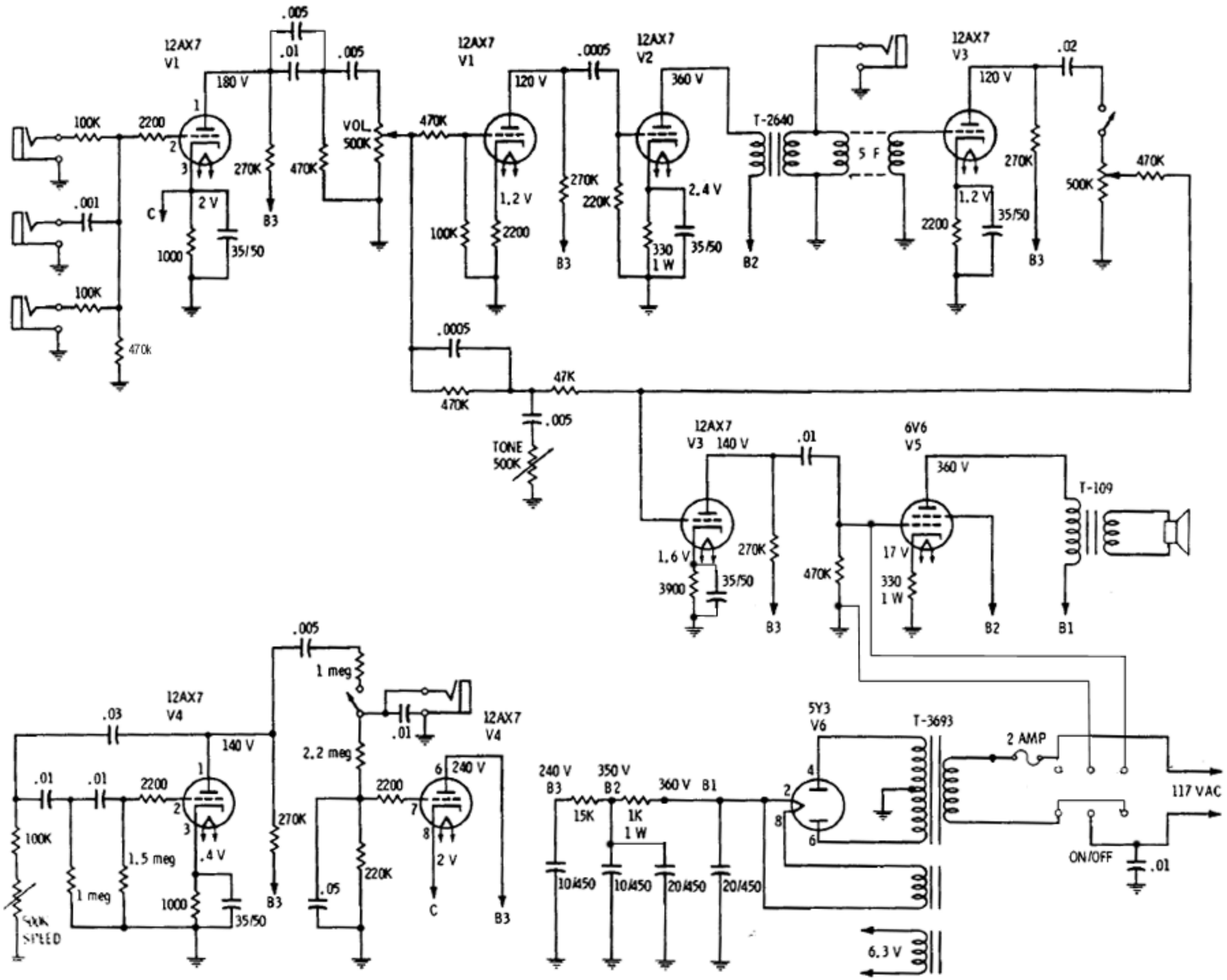

Montgomery Wards 62 GVC 9035A