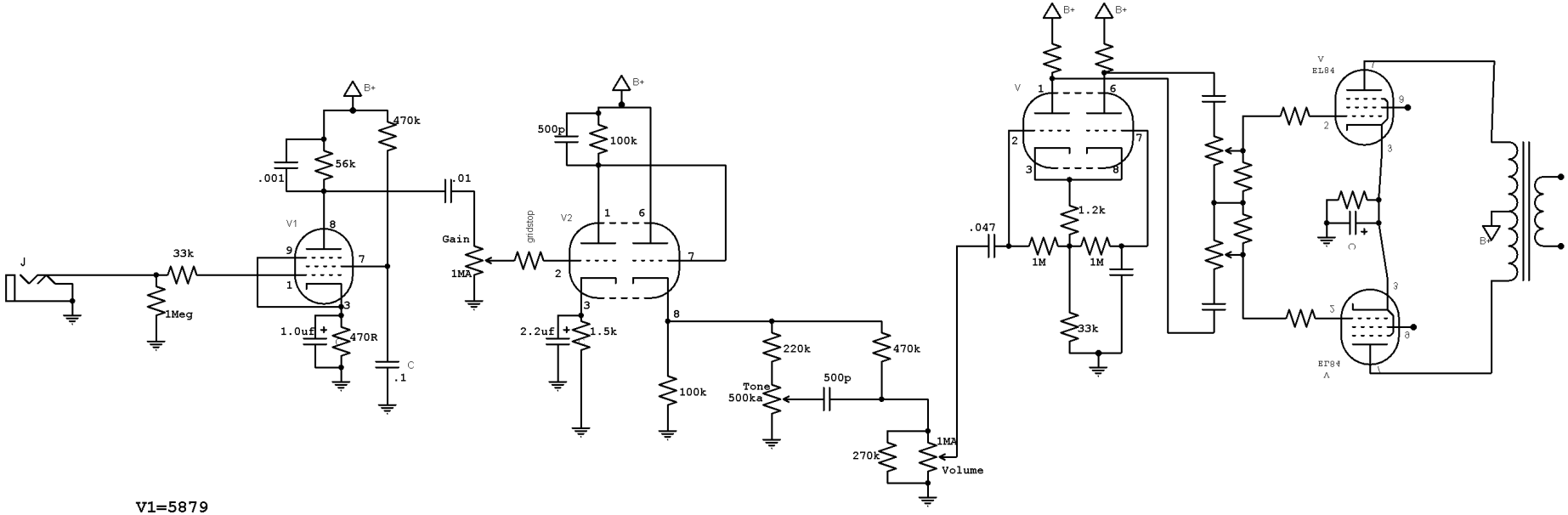

V1=5879

V2=12AY7

Pre-amp=Geezer/Tubenit

ToneStack-Delft/Moonlight

Loafin'Shed Amps		
Schematic Name		
John	Rev 1.0 2011-08-11	Page #