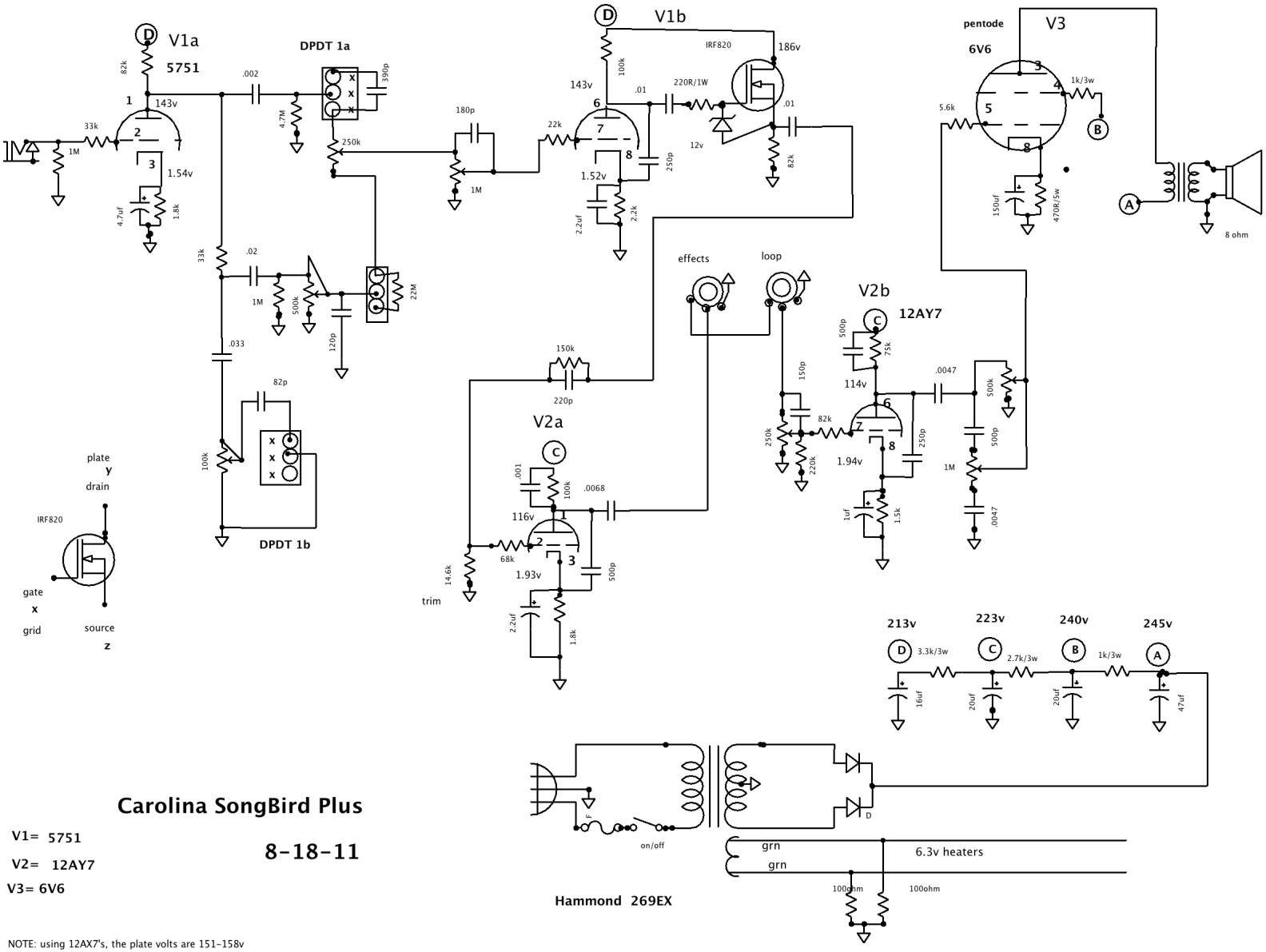

Carolina SongBird Plus

V1= 5751

V2= 12AY7

V3= 6V6

8-18-11

NOTE: using 12AX7's, the plate volts are 151-158v