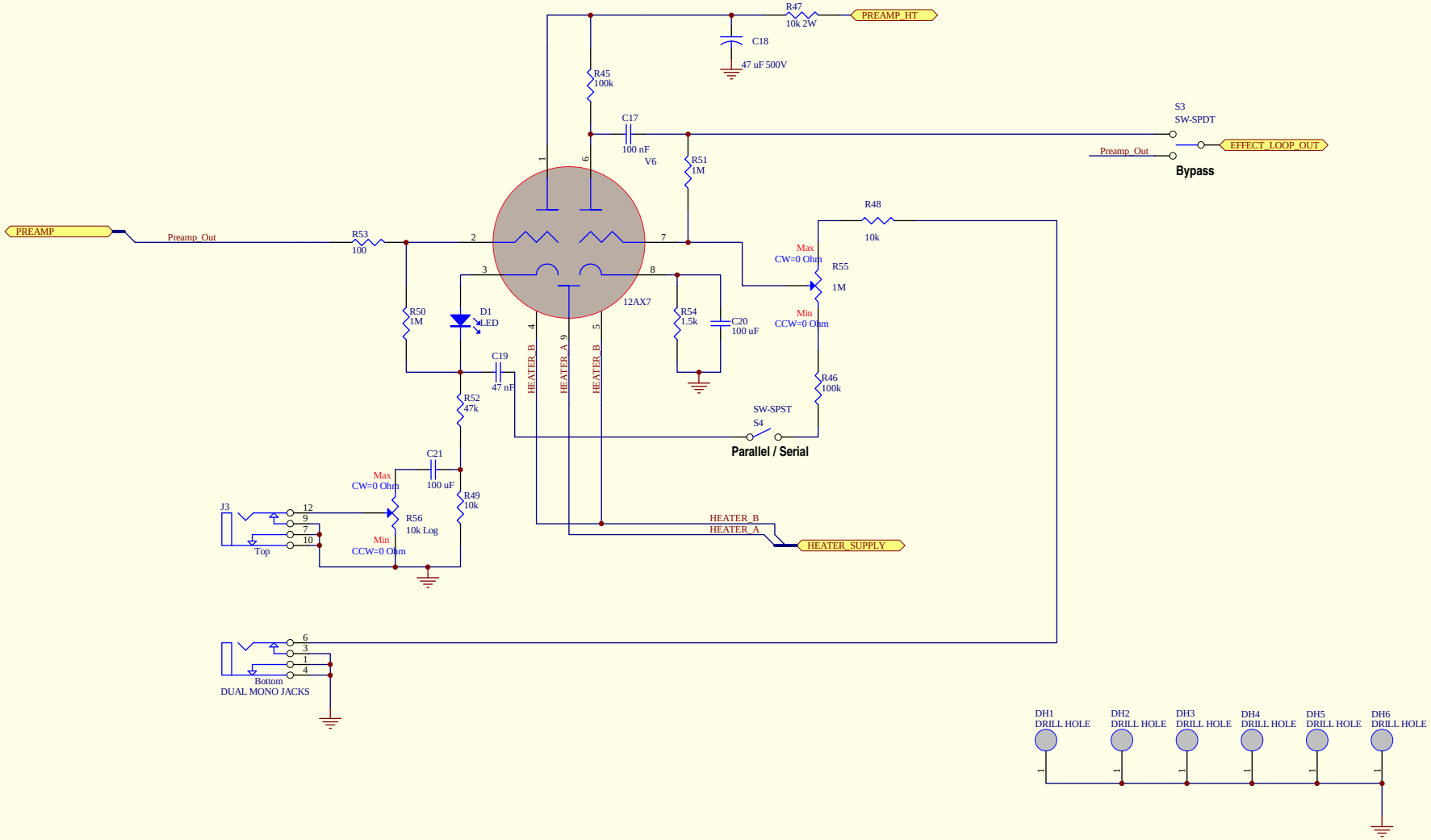Effects Loop