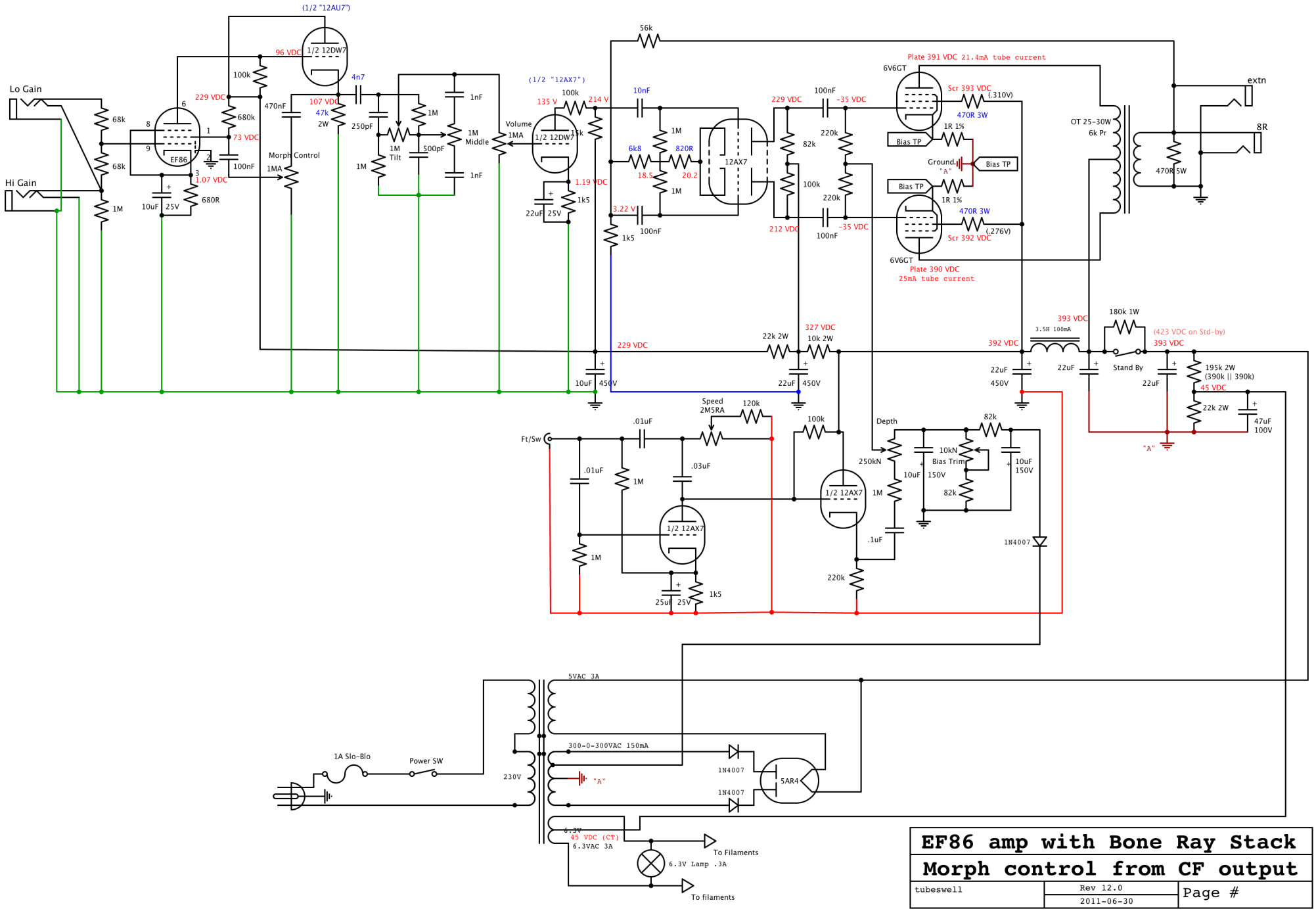

EF86 amp with Bone Ray Stack		
Morph control from CF output		
tubeswell	Rev 12.0	Page #
	2011-06-30	