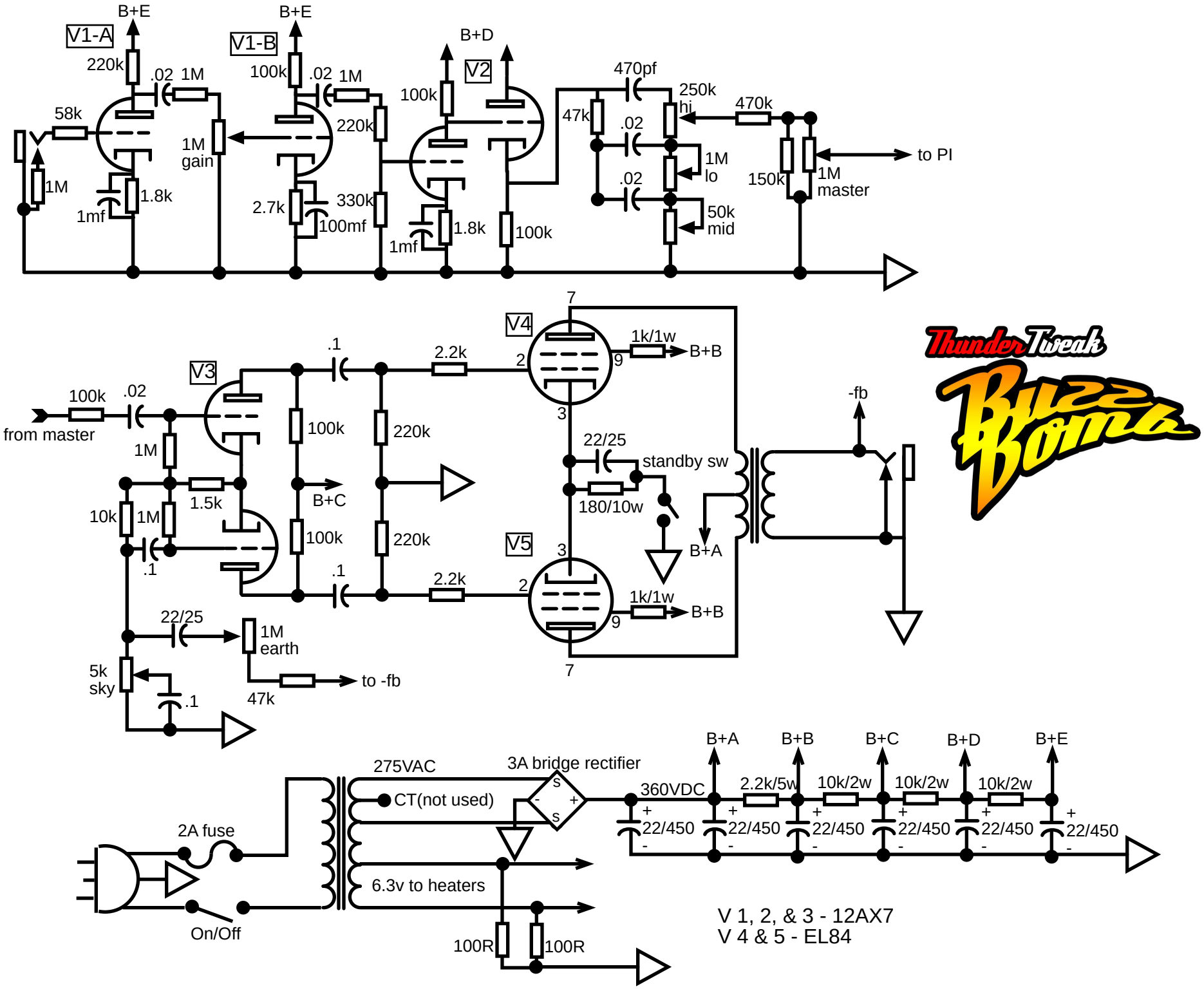
V1-A
B+E
220k
.02
1M
58k
1M
1mf
1.8k
1M
gain
V1-B
B+E
100k
.02
1M
220k
2.7k
100mf
330k
B+D
V2
100k
1mf
1.8k
100k
470pf
47k
.02
250k
hi
1M
lo
.02
50k
mid
470k
150k
1M
master
to PI
V3
100k
.02
from master
1M
1.5k
10k
1M
.1
100k
B+C
100k
.1
220k
220k
.1
2.2k
2.2k
V4
7
2
9
3
1k/1w
B+B
22/25
standby sw
180/10w
B+A
V5
3
2
9
7
1k/1w
B+B
-fb
22/25
1M
earth
5k
sky
.1
47k
to -fb
ThunderTweak
Buzz Bomb
B+A
B+B
B+C
B+D
B+E
275VAC
3A bridge rectifier
CT(not used)
360VDC
2.2k/5w
10k/2w
10k/2w
10k/2w
22/450
2A fuse
6.3v to heaters
On/Off
100R
100R
V 1, 2, & 3 - 12AX7
V 4 & 5 - EL84