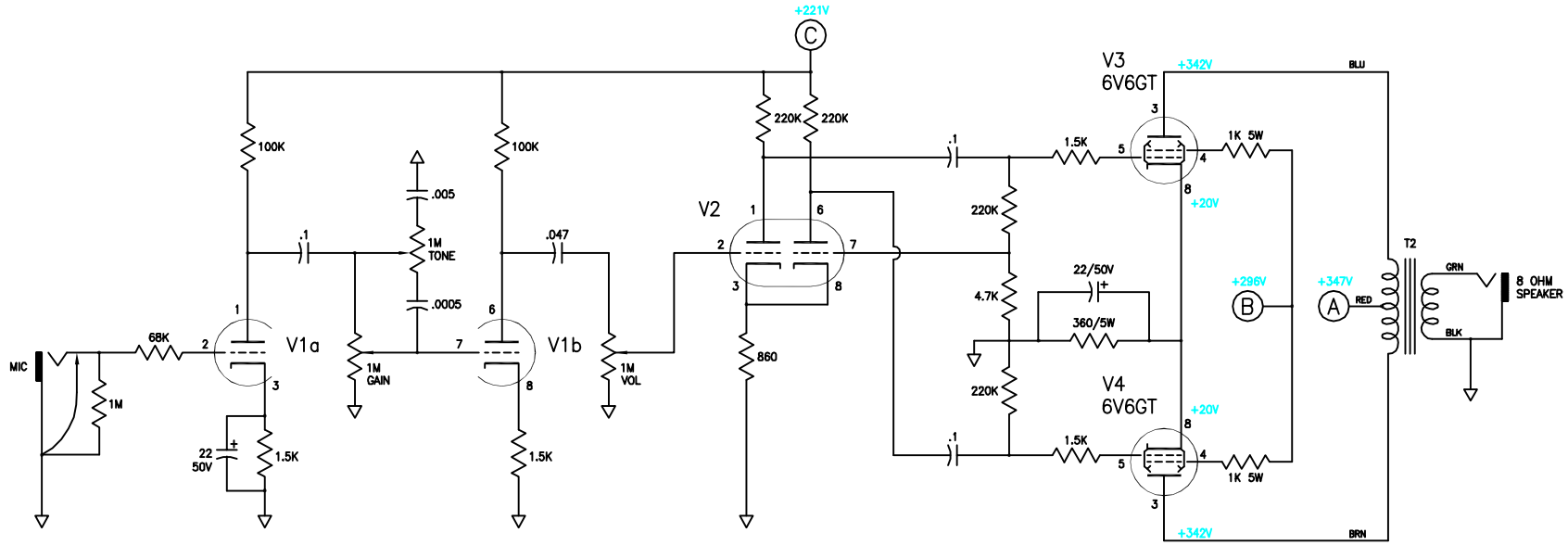

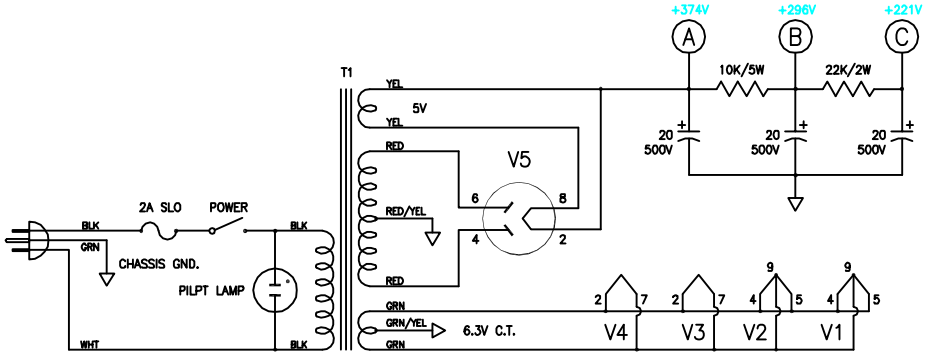

V1 = 12AX7
V2 = 12AX7
V3 = EL34
V4 = EL34
V5 = 5AR4

REV	DATE	DESCRIPTION	BY	REV	DATE	DESCRIPTION	BY
				1	10-15-11	AS BUILT	JDK

ACE 30 BOOST

CLASS AB

30 WATT PUSH/PULL AMPLIFIER SCHEMATIC