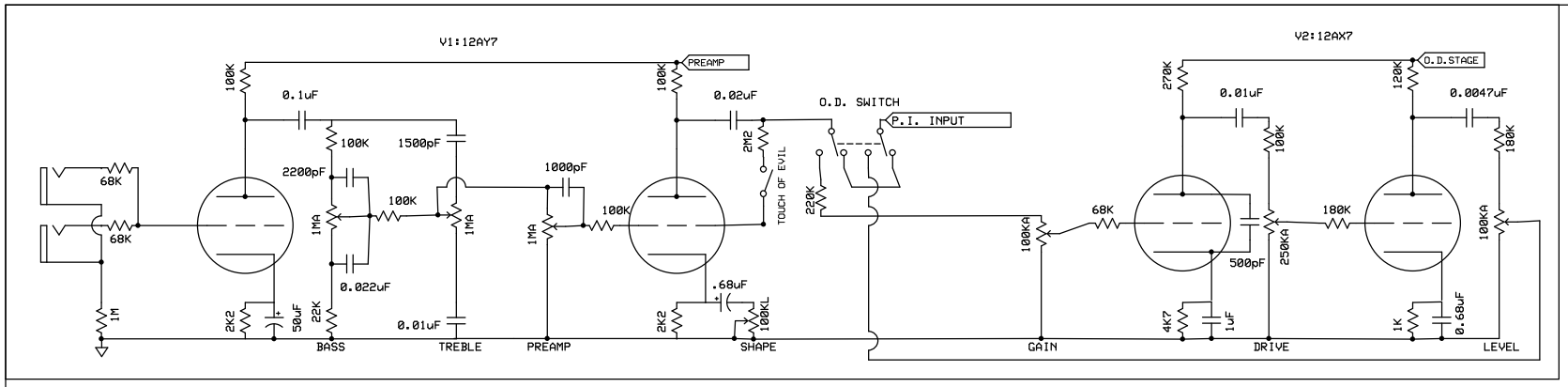
V1:12AY7
V2:12AX7
PREAMP
O.D. STAGE
O.D. SWITCH
P.I. INPUT
TOUCH OF EVIL
BASS
TREBLE
PREAMP
SHAPE
GAIN
DRIVE
LEVEL

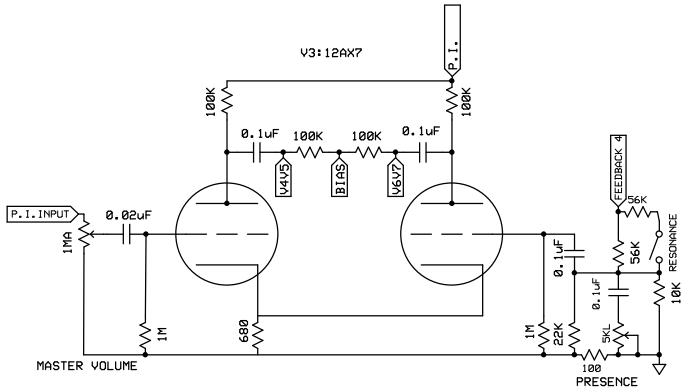
V3:12AX7
P.I.
P.I.INPUT
V4V5
BIAS
V6V7
FEEDBACK 4
RESONANCE
MASTER VOLUME
PRESENCE

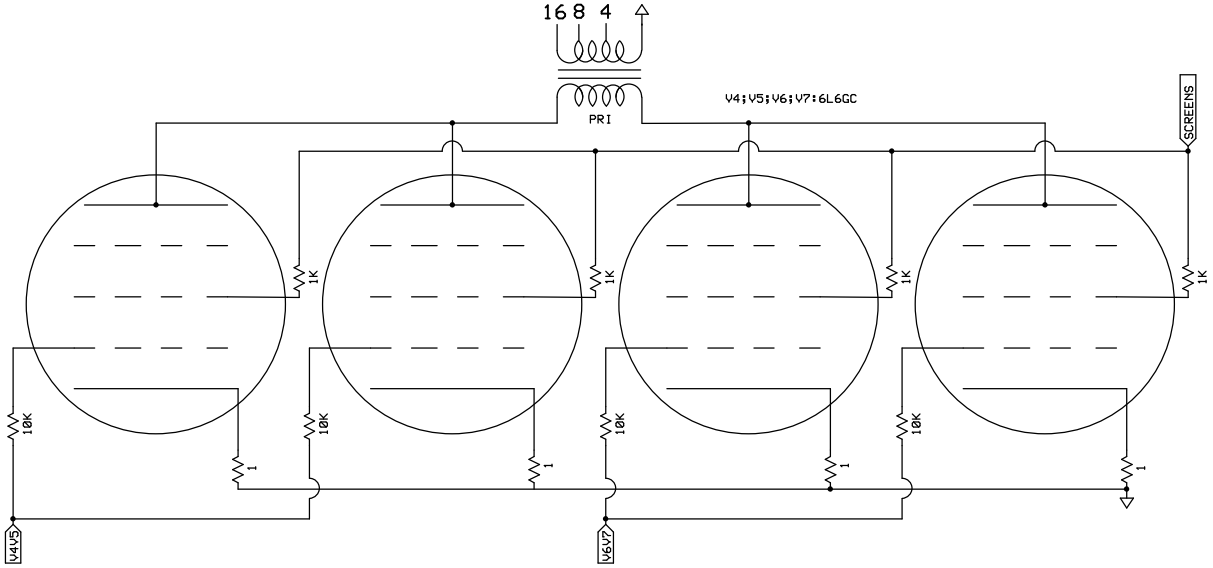
16 8 4
PRI
V4;V5;V6;V7:6L6GC
SCREENS
V4V5
V6V7

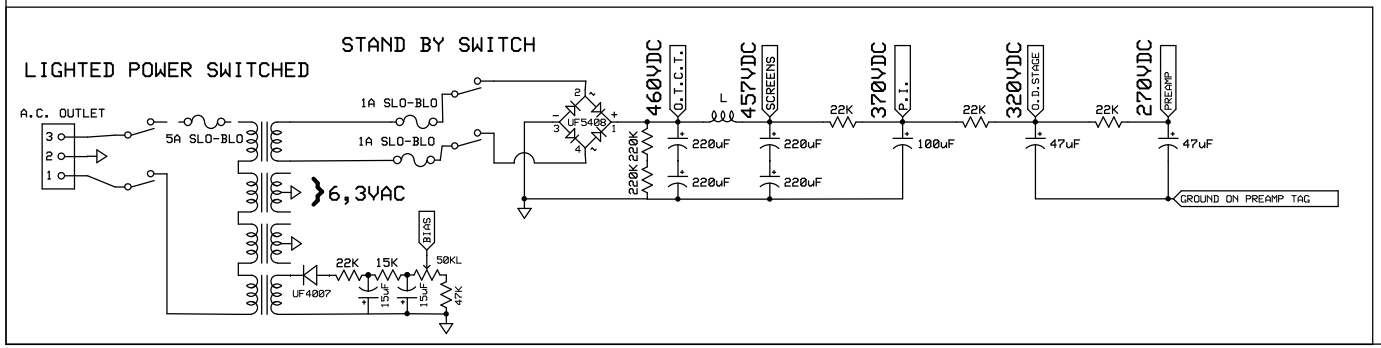
LIGHTED POWER SWITCHED
STAND BY SWITCH
A.C. OUTLET
5A SLO-BLO
1A SLO-BLO
1A SLO-BLO
6,3VAC
BIAS
460VDC
O.T.C.T.
457VDC
SCREENS
370VDC
P.I.
320VDC
O.D.STAGE
270VDC
PREAMP
GROUND ON PREAMP TAG