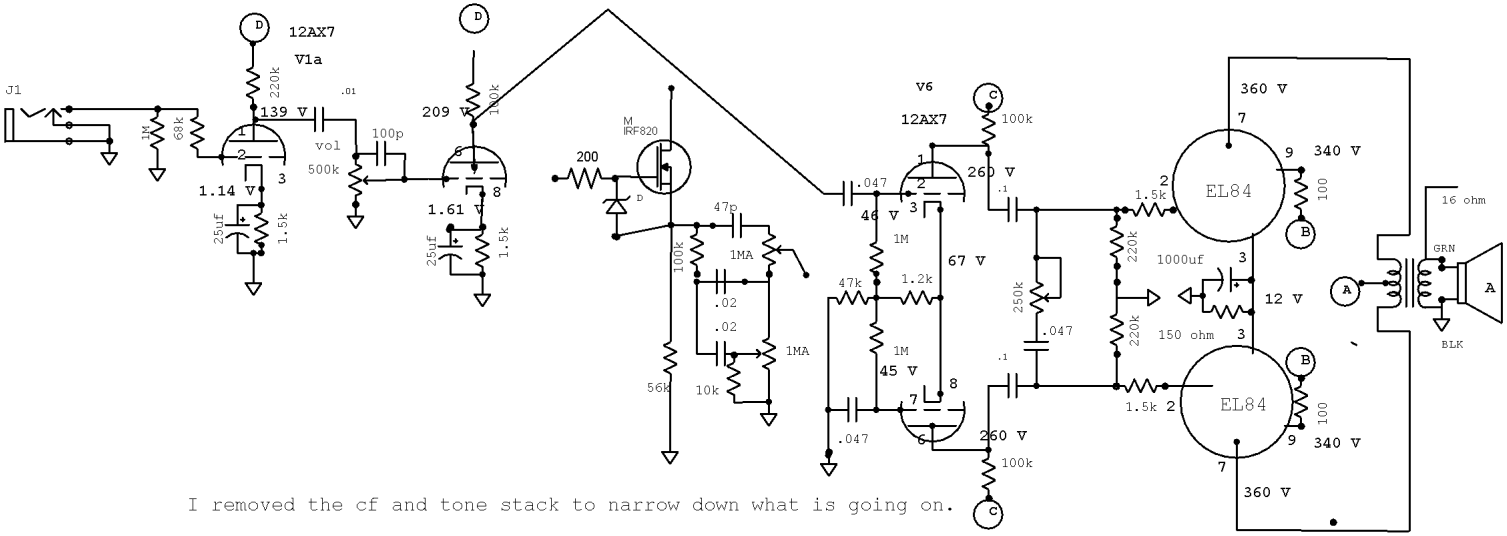
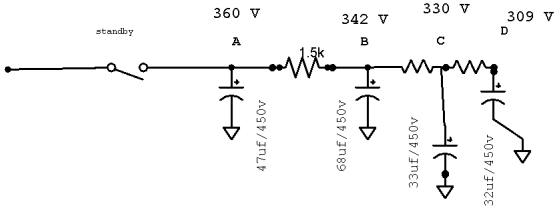
I removed the cf and tone stack to narrow down what is going on.