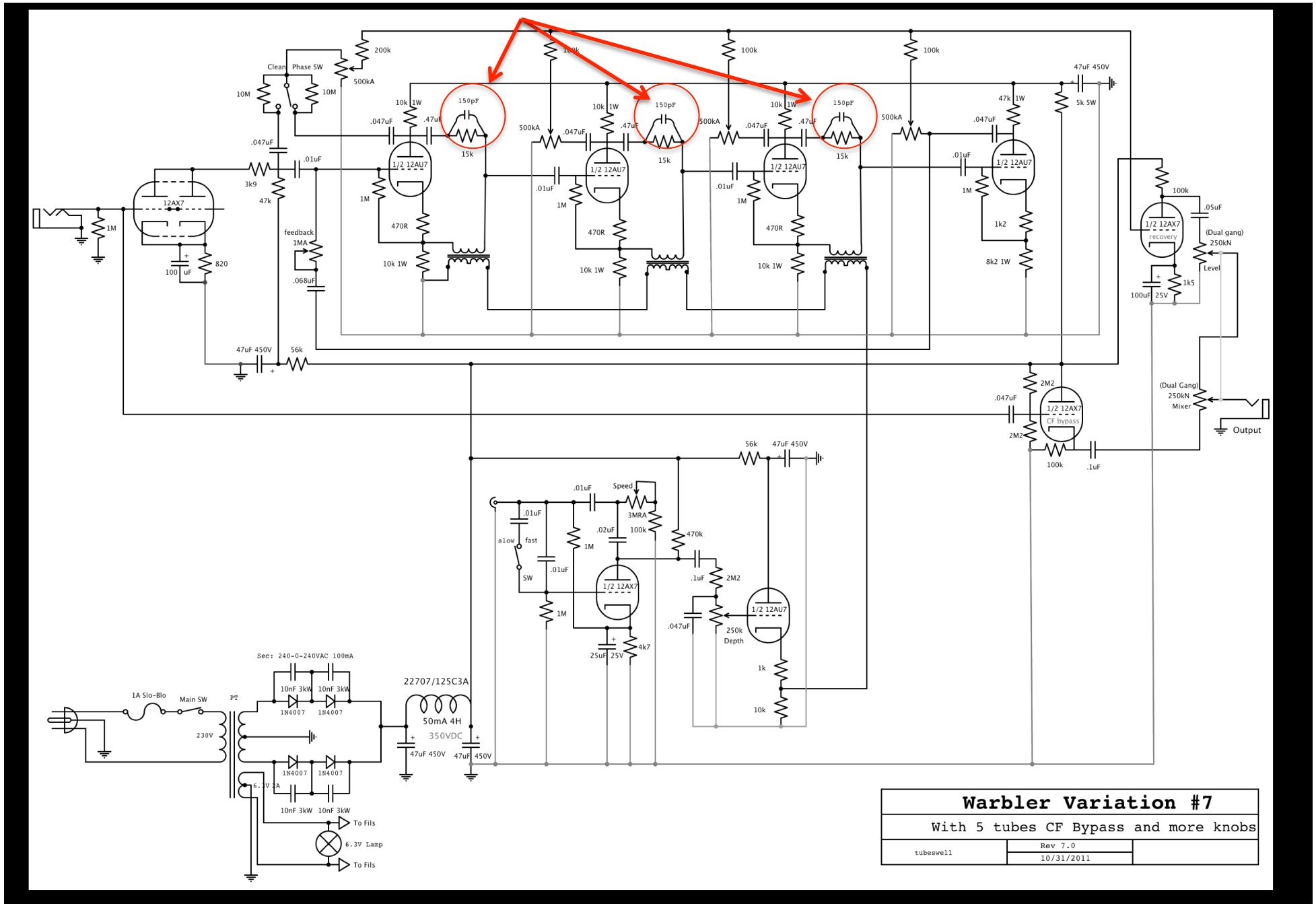50V caps okay?