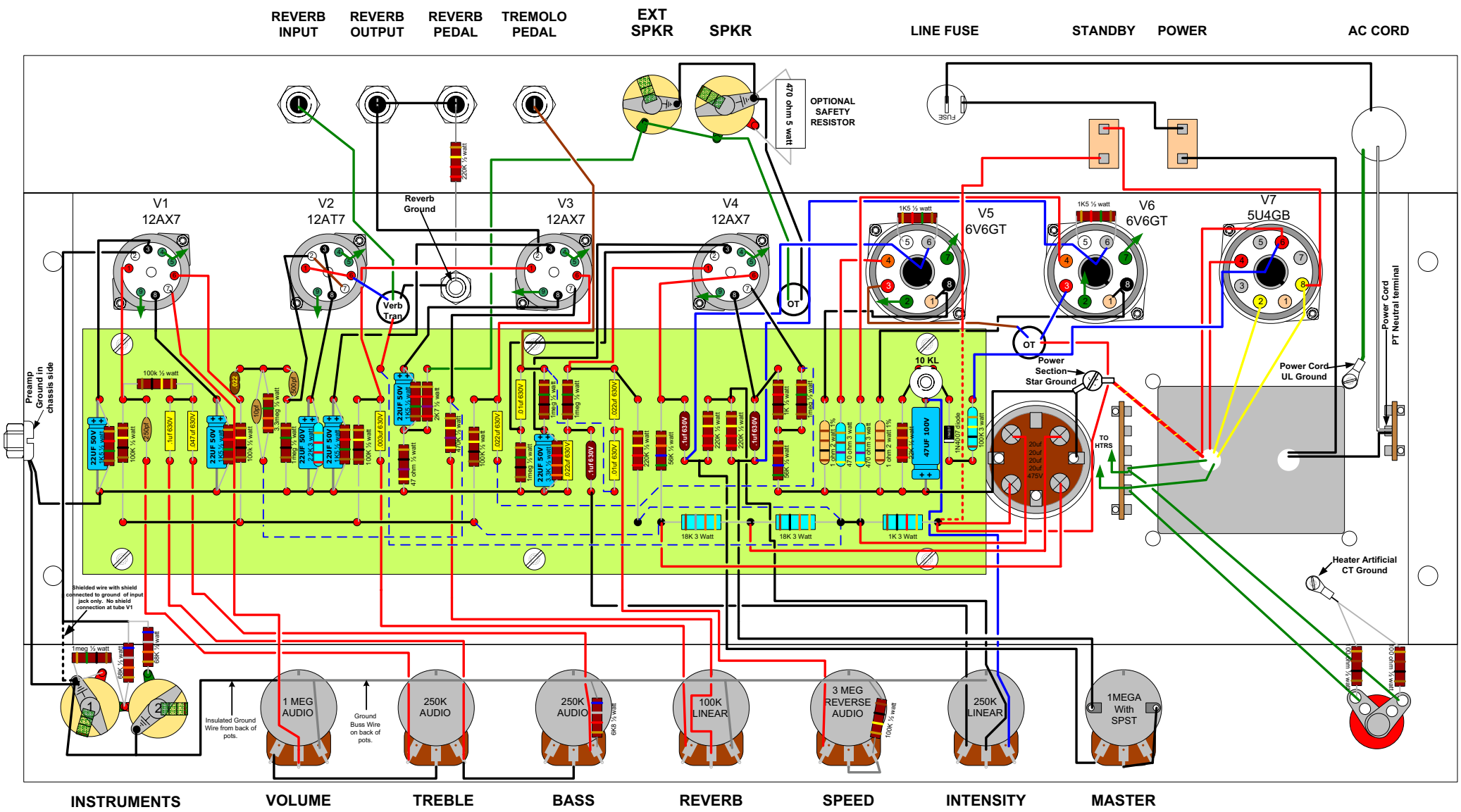
REVERB INPUT
REVERB OUTPUT
REVERB PEDAL
TREMOLO PEDAL
EXT SPKR
SPKR
LINE FUSE
STANDBY
POWER
AC CORD
470 ohm 5 watt
OPTIONAL SAFETY RESISTOR
FUSE
V1 12AX7
V2 12AT7
V3 12AX7
V4 12AX7
V5 6V6GT
V6 6V6GT
V7 5U4GB
Reverb Ground
Verb Tran
OT
10 KL
Power Section Star Ground
Power Cord UL Ground
Power Cord PT Neutral terminal
Preamp Ground in chassis side
TO HTRS
Heater Artificial CT Ground
Shielded wire with shield connected to ground of input jack only. No shield connection at tube V1
Insulated Ground Wire from back of pots.
Ground Buss Wire on back of pots.
1 MEG AUDIO
250K AUDIO
250K AUDIO
100K LINEAR
3 MEG REVERSE AUDIO
250K LINEAR
1MEGA With SPST
INSTRUMENTS
VOLUME
TREBLE
BASS
REVERB
SPEED
INTENSITY
MASTER