GUILD 66-J

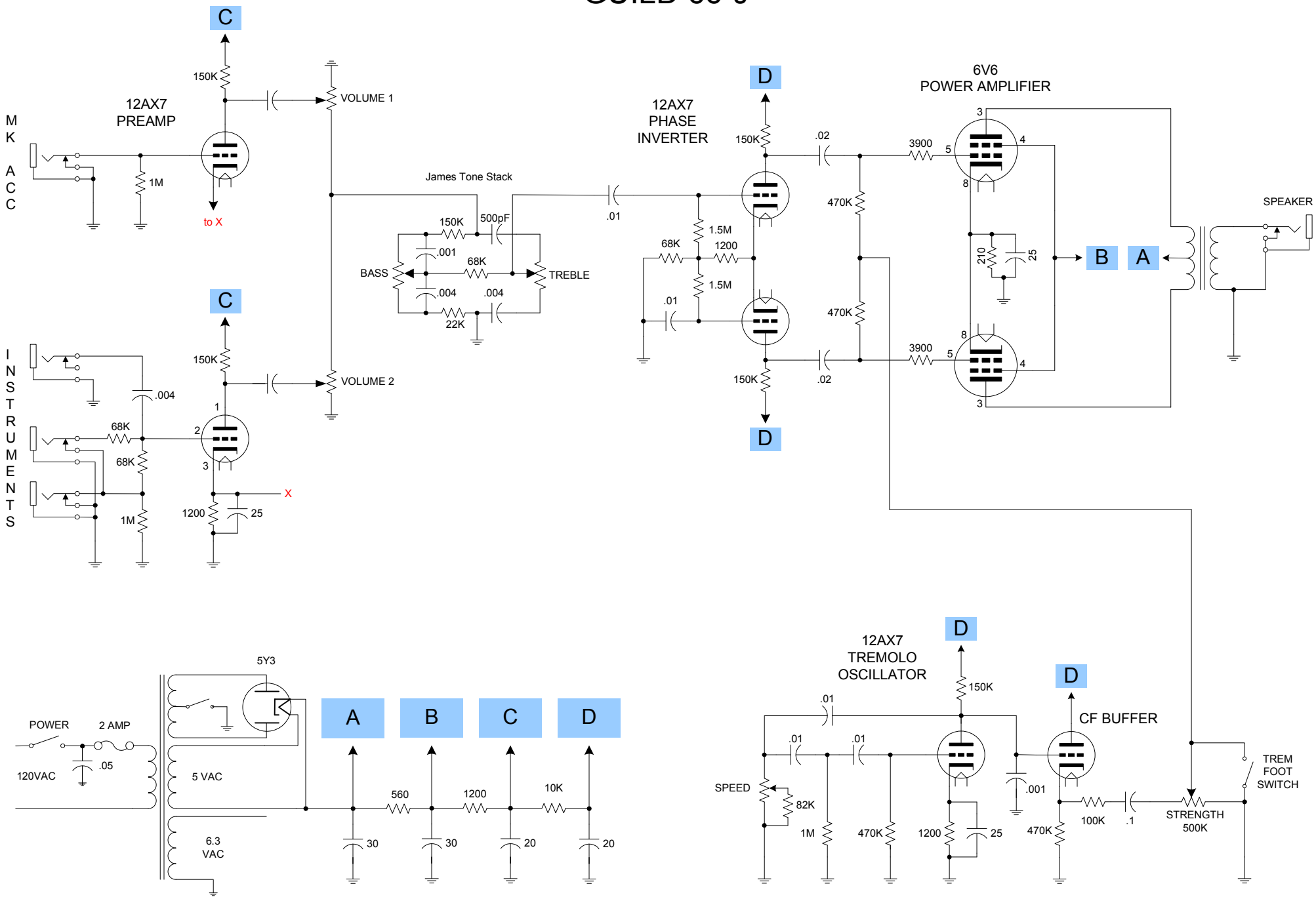
C
150K
12AX7
PREAMP
VOLUME 1
MK
ACC
1M
to X
James Tone Stack
150K
500pF
.001
68K
BASS
TREBLE
.004
.004
22K
.01
12AX7
PHASE
INVERTER
D
150K
.02
1.5M
68K
1200
1.5M
.01
470K
470K
150K
.02
D
6V6
POWER AMPLIFIER
3900
3900
210
25
B
A
SPEAKER
C
150K
VOLUME 2
.004
INSTRUMENTS
68K
68K
1M
1200
25
X
5Y3
POWER
2 AMP
120VAC
.05
5 VAC
6.3
VAC
A
B
C
D
560
1200
10K
30
30
20
20
12AX7
TREMOLO
OSCILLATOR
D
150K
.01
.01
.01
SPEED
82K
1M
470K
1200
25
.001
D
CF BUFFER
470K
100K
.1
STRENGTH
500K
TREM
FOOT
SWITCH