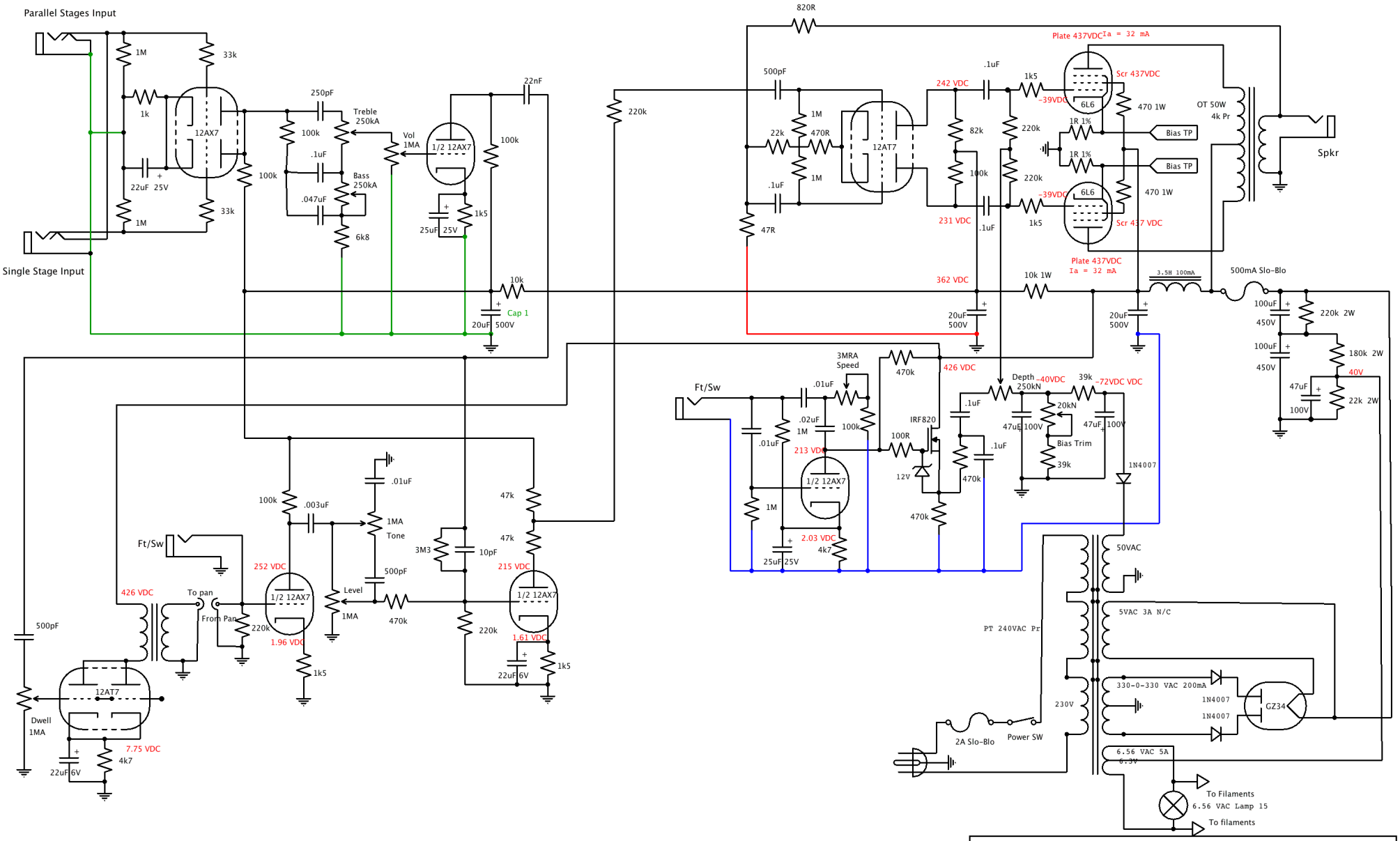

Karma Surfra		
Sw single-parallel V1		
tubeswell	Ver 1 2/6/12	Page #