Marshall JMP Series 1987 and JCM-800 2204

Switchable Dual Preamps
Drawn by Steve Luckey

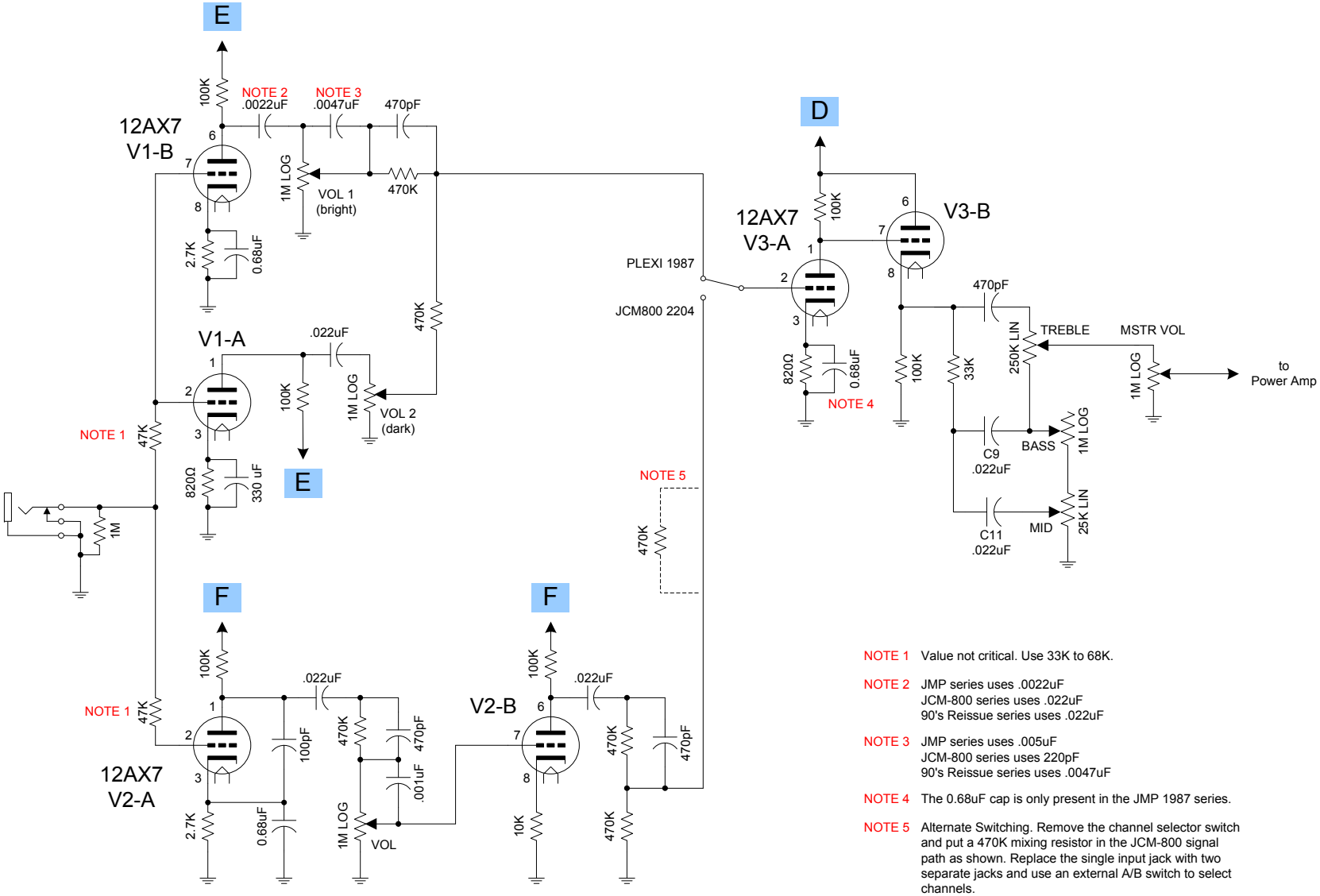

NOTE 1 Value not critical. Use 33K to 68K.

NOTE 2 JMP series uses .0022uF
JCM-800 series uses .022uF
90's Reissue series uses .022uF

NOTE 3 JMP series uses .005uF
JCM-800 series uses 220pF
90's Reissue series uses .0047uF

NOTE 4 The 0.68uF cap is only present in the JMP 1987 series.

NOTE 5 Alternate Switching. Remove the channel selector switch and put a 470K mixing resistor in the JCM-800 signal path as shown. Replace the single input jack with two separate jacks and use an external A/B switch to select channels.

Marshall JMP Series 1987 PLEXI Lead

Power Amp and Power Supply
Drawn by Steve Luckey

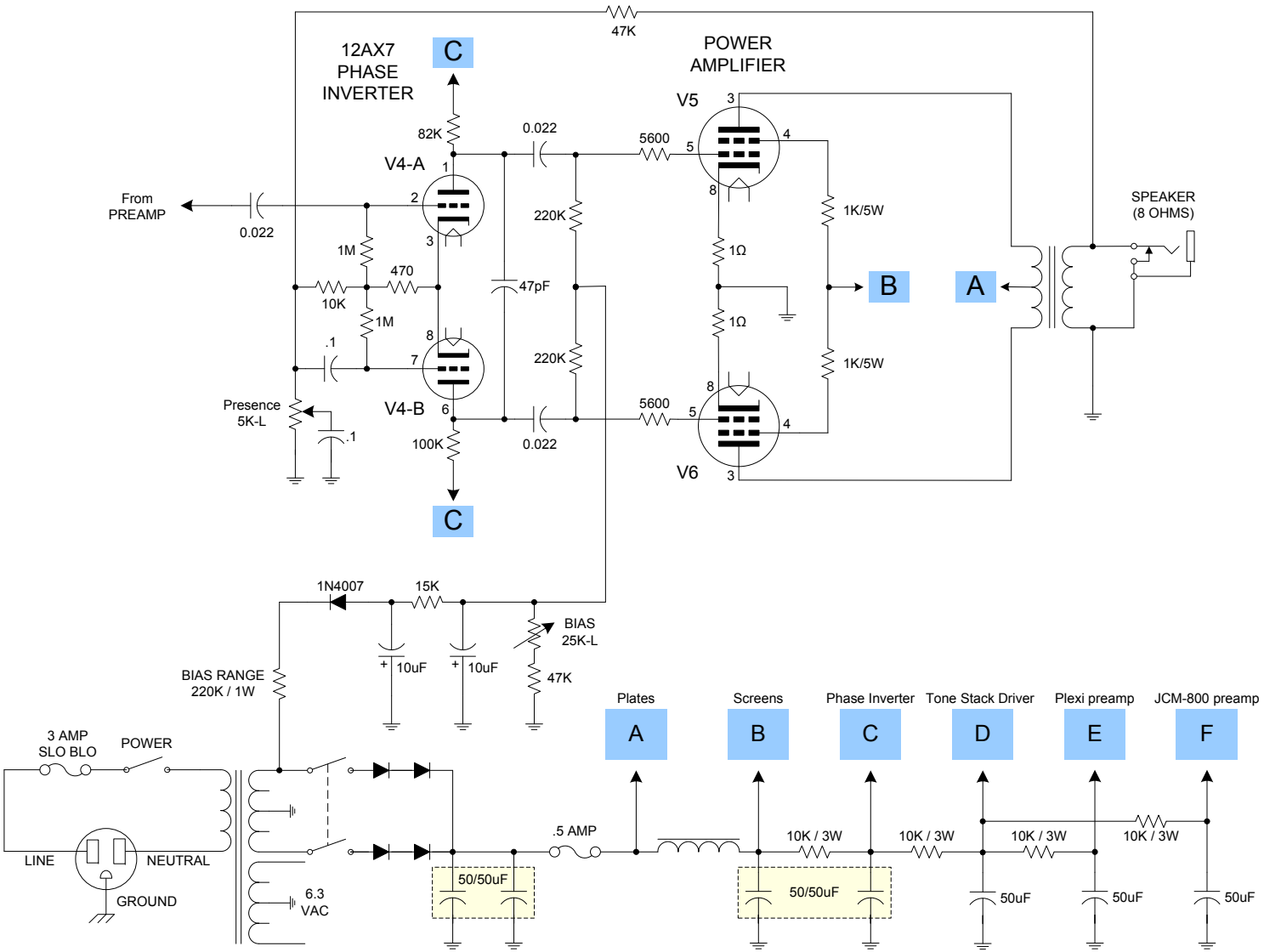

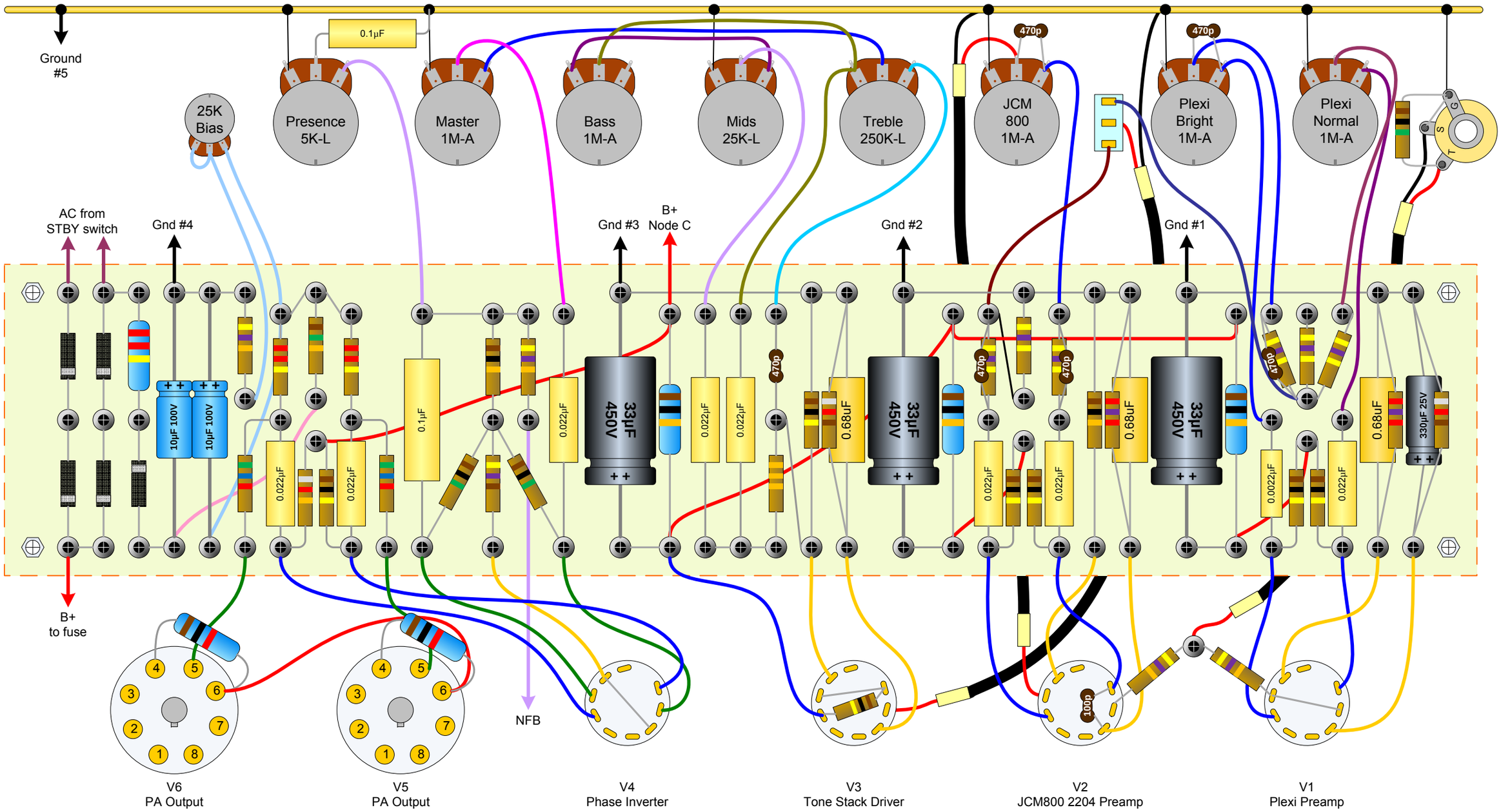
Ground #5
0.1µF
25K Bias
Presence 5K-L
Master 1M-A
Bass 1M-A
Mids 25K-L
Treble 250K-L
470p
JCM 800 1M-A
470p
Plexi Bright 1M-A
Plexi Normal 1M-A
AC from STBY switch
Gnd #4
Gnd #3
B+ Node C
Gnd #2
Gnd #1
10µF 100V
10µF 100V
0.022µF
0.1µF
0.022µF
33µF 450V
0.022µF
0.022µF
470p
0.68uF
33µF 450V
470p
470p
0.68uF
33µF 450V
470p
0.0022µF
0.022µF
0.68uF
330µF 25V
B+ to fuse
NFB
100p
V6 PA Output
V5 PA Output
V4 Phase Inverter
V3 Tone Stack Driver
V2 JCM800 2204 Preamp
V1 Plexi Preamp