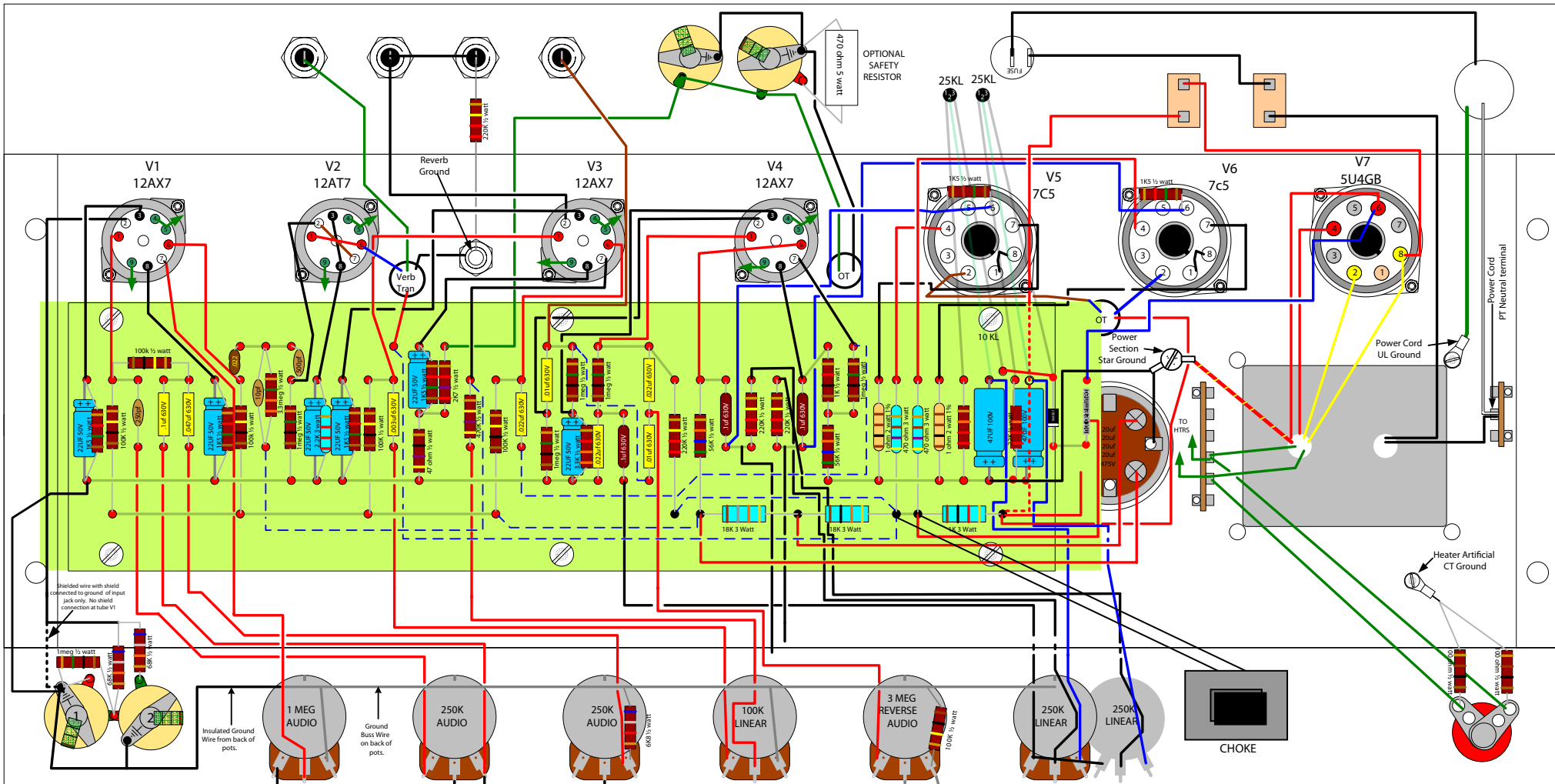
REVERB INPUT
REVERB OUTPUT
REVERB PEDAL
TREMOLO PEDAL
EXT SPKR
SPKR
LINE FUSE
STANDBY
POWER
AC CORD
470 ohm 5 watt
OPTIONAL SAFETY RESISTOR
FUSE
25KL
25KL
220K ½ watt
Reverb Ground
V1 12AX7
V2 12AT7
V3 12AX7
V4 12AX7
V5 7C5
V6 7c5
V7 5U4GB
Verb Tran
OT
OT
1K5 ½ watt
1K5 ½ watt
10 KL
Power Section Star Ground
Power Cord UL Ground
Power Cord PT Neutral terminal
TO HTRS
Heater Artificial CT Ground
100k ½ watt
Shielded wire with shield connected to ground of input jack only. No shield connection at tube V1
1meg ½ watt
68K ½ watt
68K ½ watt
Insulated Ground Wire from back of pots.
Ground Buss Wire on back of pots.
1 MEG AUDIO
250K AUDIO
250K AUDIO
100K LINEAR
3 MEG REVERSE AUDIO
250K LINEAR
250K LINEAR
CHOKE
INSTRUMENTS
VOLUME
TREBLE
BASS
REVERB
SPEED
INTENSITY